air:unit

AIRUNIT Control 2.0

Decentralised domestic ventilation



Installation and operating manual

Installation and operating manual

Table of contents

1. Scope of delivery ... 3

2. User information ... 3
2.1 Safety and warning instructions ... 3
2.1.1 Intended use ... 4
2.1.2 Symbols and notations ... 4

3. Operation ... 5

4. Mounting ... 6

5. Electrical connection ... 7
5.1 Connecting the AIRUNIT SOLUS 2.0 ventilation unit(s) to the control unit 2.0 ... 8
5.2 Connecting the AIRUNIT SOLUS 2.0^{SE} ventilation unit(s) to the control 2.0 ... 9
5.3 Connecting the AIRUNIT GEMINI ventilation unit(s) to the control unit 2.0 ... 10
5.4 AIRUNIT SOLUS 2.0 with extension set ... 11
5.5 AIRUNIT SOLUS 2.0^{SE} with extension set ... 12
5.6 AIRUNIT GEMINI ... 13
5.7 AIRUNIT SOLUS 2.0 and AIRUNIT GEMINI with extension set ... 14
5.8 AIRUNIT SOLUS 2.0^{SE} and AIRUNIT GEMINI with extension set ... 15
5.9 Overview matrix AIRUNIT SOLUS 2.0 ... 16
5.10 Overview matrix AIRUNIT SOLUS 2.0^{SE} ... 17

6. Bathroom fan operation ... 18
6.1 External digital input ... 18

7. Sensor operation with external air quality sensors ... 19

8. Settings ... 20
8.1 Set rotary coding switch ... 20
8.2 Activating connected AIRUNIT SOLUS 2.0 ventilation units ... 21
8.3 Set DIP switch ... 22
8.4 Activate connected AIRUNIT GEMINI ventilation units ... 22
8.5 Activate connected air quality sensors ... 23
8.6 Automatic bypass ... 23
8.7 Set ventilation mode ... 24
8.7.1 Function "Summer mode" ... 24
8.7.2 Function "Winter mode" ... 25
8.7.3 Function "Exhaust air mode" AIRUNIT GEMINI ... 25

9. Maintenance ... 26
9.1 Filter insert ... 26
9.1.1 Remove filter insert from AIRUNIT SOLUS 2.0 / SOLUS 2.0^{SE} ... 26
9.1.2 Remove filter insert AIRUNIT GEMINI ... 27

10. Operating hours counter ... 28

11. Troubleshooting ... 28

12. Technical data ... 29

EU Declaration of Conformity ... 30

1. Scope of delivery

- **AIRUNIT** control 2.0
- Installation and operating manual
- Commissioning and maintenance protocol

The following products are required for the complete **AIRUNIT** system:

- **AIRUNIT** control 2.0
- **AIRUNIT** ventilation unit
- **AIRUNIT** wall duct
- **AIRUNIT** inner cover
- **AIRUNIT** outer cover
- **AIRUNIT** air quality sensor (optional)

2. User information

The unit may only be used for its intended purpose. Improper use, inadequately performed installation or maintenance work as well as structural modifications may impair the function and safety of the ventilation unit and invalidate any warranty claims.
Before installing the unit, check the delivery for completeness and integrity and contact your supplier directly if any parts are missing or damaged.

2.1 Safety and warning instructions

- Read these instructions carefully and completely before starting the installation.
- Transport: To protect all parts from damage, they should remain in their original packaging until they reach the installation site. Internal parts can be damaged by shocks or falling.
- Damaged units or parts must not be put into operation.
- The safety stickers and type plates must not be removed.
- The unit is not ready for operation when delivered and must first be connected by a qualified electrician.
- Assembly and maintenance work on the associated ventilation unit may only be carried out by trained specialists in compliance with the regulations on occupational safety and accident prevention.
- All assembly and installation work must always be carried out in a de-energised state.
- **AIRUNIT** ventilation systems may only be installed and operated inside the building. When selecting the unit location, ensure that the ventilation unit is accessible for inspection and maintenance work.
- The unit must not be installed near flammable liquids or gases.
- When installing the ventilation units, observe the recognised rules of technology (ARdT) with regard to unit installation, electrical work, fire protection and the specifications for the ventilation of flats (DIN 1946-6).

2.1.1 Intended use

The **AIRUNIT** control 2.0 can be used to control up to 6 **AIRUNIT** SOLUS 2.0 and up to 4 **AIRUNIT** GEMINI.
In addition, up to 2 extension sets can be connected to the control 2.0. A maximum of 6 fans may be connected per extension set (**AIRUNIT** SOLUS 2.0 = 1 x fan, **AIRUNIT** GEMINI = 2 x fans), whereby up to a maximum of 18 ventilation units can be controlled (see chapter **Overview matrix AIRUNIT**).
The **AIRUNIT** control 2.0 can be mounted in a simple cavity wall box. Any other use or use beyond this is considered improper. The manufacturer/supplier is not liable for any damage resulting from this.

2.1.2 Symbols and notations

A warning is composed of a signal word and a warning symbol as well as text describing the extent of the hazard:

SIGNAL WORD



Nature and source of the hazard
Consequences of not observing the warning.

- Countermeasure that must be taken to avoid the hazard.
- Further countermeasures, if necessary ...

The following hazard levels are present:

DANGER	indicates an immediate hazard that will result in death or serious injury if not avoided.
WARNING	indicates a potentially hazardous situation which, if not avoided, could result in death or serious injury.
CAUTION	indicates a hazard that may result in minor or moderate injury if not avoided.

Attention!	indicates a hazard that can result in malfunctions and / or damage to property if it is not avoided.

Notice	indicates useful and further information as well as application tips, but not safety instructions.

3. Operation

A Function button with "Winter mode" indicator light
B Function button with "Summer mode" indicator light
C Indicator lamps Power levels
D Function key power level "UP"
E Function key power level "DOWN"
F Indicator lamp "OFF / minimum ventilation"
G Indicator lamp "Filter change / malfunction"

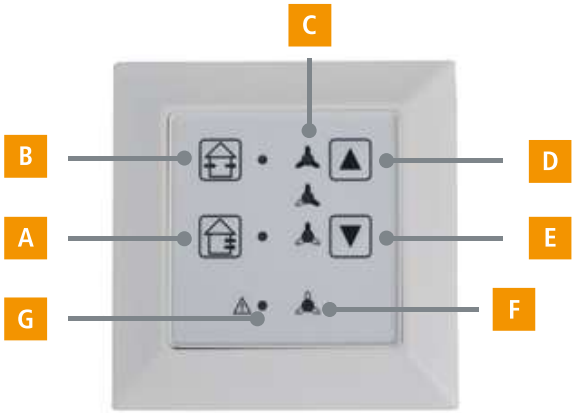

Button / Symbol	Description
▲	**Press ▲ button**: Switch on the connected units to minimum ventilation. **Press ▲ button again:** Select the next higher power level. **Press ▲ and hold button for 3 seconds:** Activate intensive ventilation (level 5).
▼	**Press ▼ button:** Reset the appliance to the next lower power level. **Press ▼ button again:** Switch off the unit.
▼	**Press ▼ and hold button for 3 seconds**: Activate the "Sleep Timer" function. The power level display remains on and the lowest LED pulses. After two hours, the appliance switches back to the power level last switched on. **Press ▲ button:** Clears the "Sleep Timer" and switches the unit back to normal operation.
	Press button: Set the unit to supply air or extract air mode* without heat recovery ("summer mode"). Summer mode is automatically switched back to winter mode 8 hours after it is activated. **Press button again:** Extend the "summer mode" by another 8 hours. * for **AIRUNIT** SOLUS 2.0 depending on the setting on the rotary coding switch.
	Press button: Set the unit to alternating supply/extract air operation with heat recovery (winter operation). During the heating period, the unit should be operated constantly in this setting.

Button / Symbol	Description
	**lights up:** The unit is in power level 4. **pulsates:** The appliance is in power level 5 and is automatically switched back to power level 4 one hour after it is activated.
	**lights up:** The unit is in power level 3.
	**lights up:** The unit is in power level 2.
	**lights up:** The unit is in power level 1. **pulsates** and the display or goes out: The connected units are switched off. If the OFF level is locked, this option cannot be selected.
	**Display ● lights up permanently:** Indicates that the filter insert of the ventilation unit needs to be checked/cleaned. (See chapter **Maintenance**). **Display ● flashes:** Indicates a malfunction on the control unit of the **AIRUNIT** control. The control electronics or the operating unit must be checked by a qualified electrician (see chapter **Troubleshooting**).

4. Mounting

Notice	**Before installing AIRUNIT ventilation systems, a ventilation concept should be drawn up from which** • **the number of ventilation units,** • **their place of installation,** • **the ventilation principle (cross-ventilation, individual room ventilation) and** • **the position / number of the associated AIRUNIT control 2.0.**

The **AIRUNIT** control 2.0 is designed for installation in a simple cavity wall box.

Attention!	**Even in combination with the extension sets, a maximum of 18 AIRUNIT SOLUS 2.0 units may be operated by one AIRUNIT control 2.0.** **The AIRUNIT control 2.0 is not compatible with common switch ranges.** **It is recommended to install the extension set in an electronics box.**

5. Electrical connection

DANGER



Risk of electric current injury!
There is a risk of injury from electric current.

- Before carrying out electrical work, the power supply must be disconnected and secured against reconnection.
- The device is not ready for operation when delivered and must first be connected by a qualified electrician.
- The electrical installation may only be carried out by competent persons in accordance with the applicable legal requirements.
- The installation must comply with national and/or local electrical regulations.
- A residual current switch (rated residual current ≤ 30 mA) is required for each circuit.

The supply voltage of the **AIRUNIT** control 2.0 is 230 V/50 Hz. The following specifications must be observed:

- The ventilation units are controlled by 12 V direct voltage (DC), therefore the ventilation units must never be connected to the 230 V mains voltage of the control electronics.
- During installation and maintenance work, all poles must be disconnected from the mains with a contact opening width of at least 3 mm.
- As connection cable for the **AIRUNIT** GEMINI and the **AIRUNIT** SOLUS 2.0 ventilation units, a minimum J-Y(ST)Y 2x2x0.6 mm cable is recommended up to a connection length of 30 metres.
- A sheathed cable 3 x 1.5 mm² (e.g. NYM-J 3 x 1.5 mm²) is recommended as the supply cable.

The **AIRUNIT** control 2.0 is to be connected as stationary equipment with permanently installed cables.

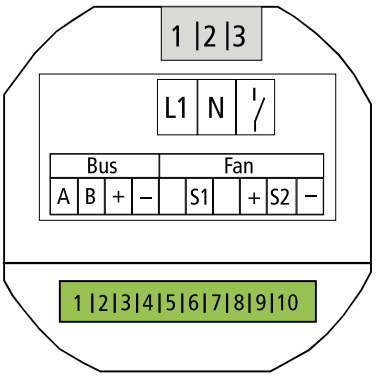

Connection terminals	
1	RS485-A
2	RS485-B
3	12V Bus
4	GND Bus
6	PWM A S1*
8	12V*
9	PWM B S2*
10	GND*

Mains terminals	
1	L1
2	N
3	External input L1' must be in phase with L1!

* Connections for the **AIRUNIT** SOLUS 2.0^{SE}

The **AIRUNIT** SOLUS / SOLUS 2.0^{SE} is connected in pairs. In paired operation, one ventilation unit of the unit pair operates in supply air mode, the assigned second unit in extract air mode.
The air directions of both units are changed at intervals. If several units are used, cross-ventilation can take place in this way, e.g. in order to convey cool outside air into the building during the night hours in summer.

5.1 Connecting the AIRUNIT SOLUS 2.0 ventilation unit(s) to the control unit 2.0

When using **AIRUNIT** SOLUS 2.0 units, the connection is made via connection terminals **1** to **4** (BUS).
For this, a maximum of 10 **AIRUNIT** SOLUS 2.0 ventilation units must be connected in parallel to plug connection **1** (**RS485-A**), **2** (**RS485-B**), **3** (**12V bus**) and **4** (**GND**)(**BUS**) and connected to the device electronics of the respective ventilation unit as shown:

- **A** **AIRUNIT** control 2.0
- **B** Rotary coding switch
- **C** **AIRUNIT** SOLUS 2.0 ventilation unit
- **D** Connections **AIRUNIT** control 2.0
- **E** Connections of ventilation unit **AIRUNIT** SOLUS 2.0

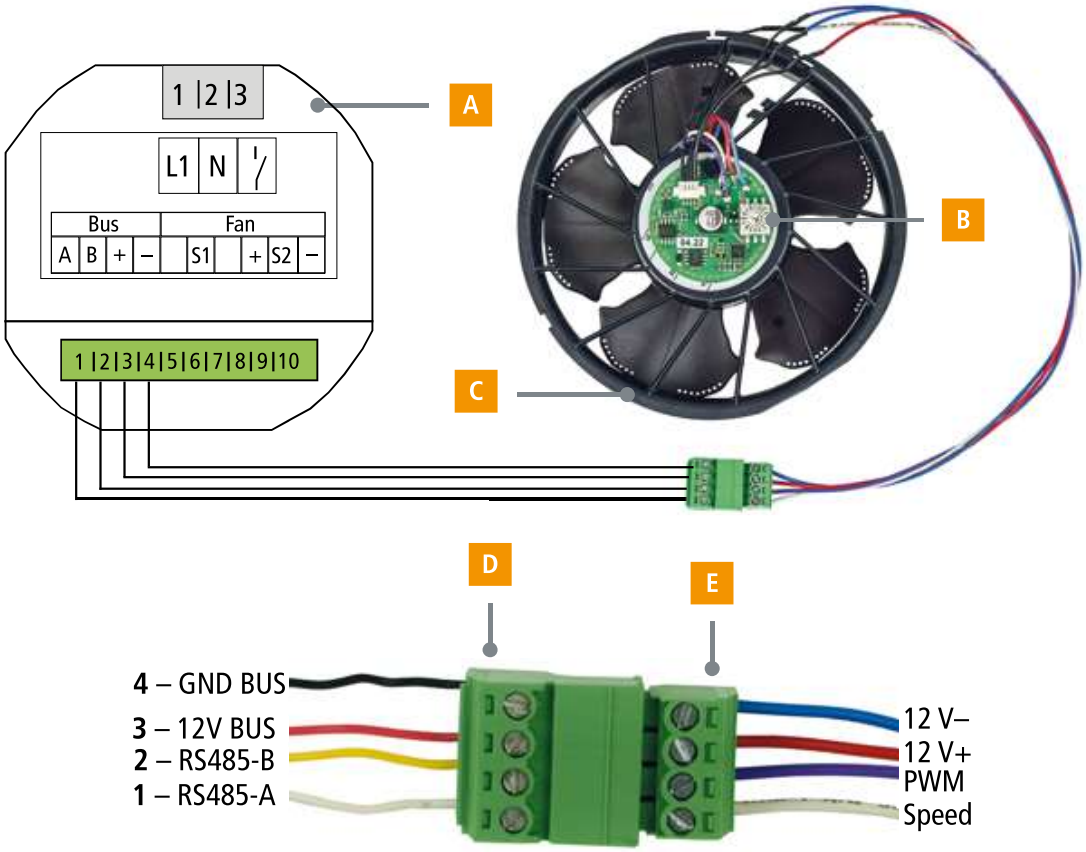

A maximum of 6 **AIRUNIT** SOLUS 2.0 ventilation units can be operated with the **AIRUNIT** control 2.0.
An extension to up to 10 units is possible by means of an extension set.



When connecting several **AIRUNIT** SOLUS 2.0 ventilation units, the address must be set on the rotary coding switch (B). The air direction can be assigned at this switch (see chapter **Set rotary coding switch**).

Attention!	**Each address may only be assigned once! Be sure to note assignments to address settings in the commissioning and maintenance log!**

5.2 Connecting the AIRUNIT SOLUS 2.0^{SE} ventilation unit(s) to the control 2.0

When using **AIRUNIT** SOLUS 2.0^{SE} units, the connection is made via terminals **6**, **8**, **9** and **10**. For this purpose, a maximum of 18 **AIRUNIT** SOLUS 2.0^{SE} ventilation units must be connected in parallel to plug connection **6** (**S1**), **8** (**12V+**) , **9** (**S2**) and **10** (**12V-**) and connected to the unit electronics of the respective ventilation unit as shown:

- **A** **AIRUNIT** control 2.0
- **B** Toggle switch
- **C** **AIRUNIT** SOLUS 2.0^{SE} ventilation unit
- **D** Connections **AIRUNIT** control 2.0
- **E** Connections of ventilation unit **AIRUNIT** SOLUS 2.0^{SE}

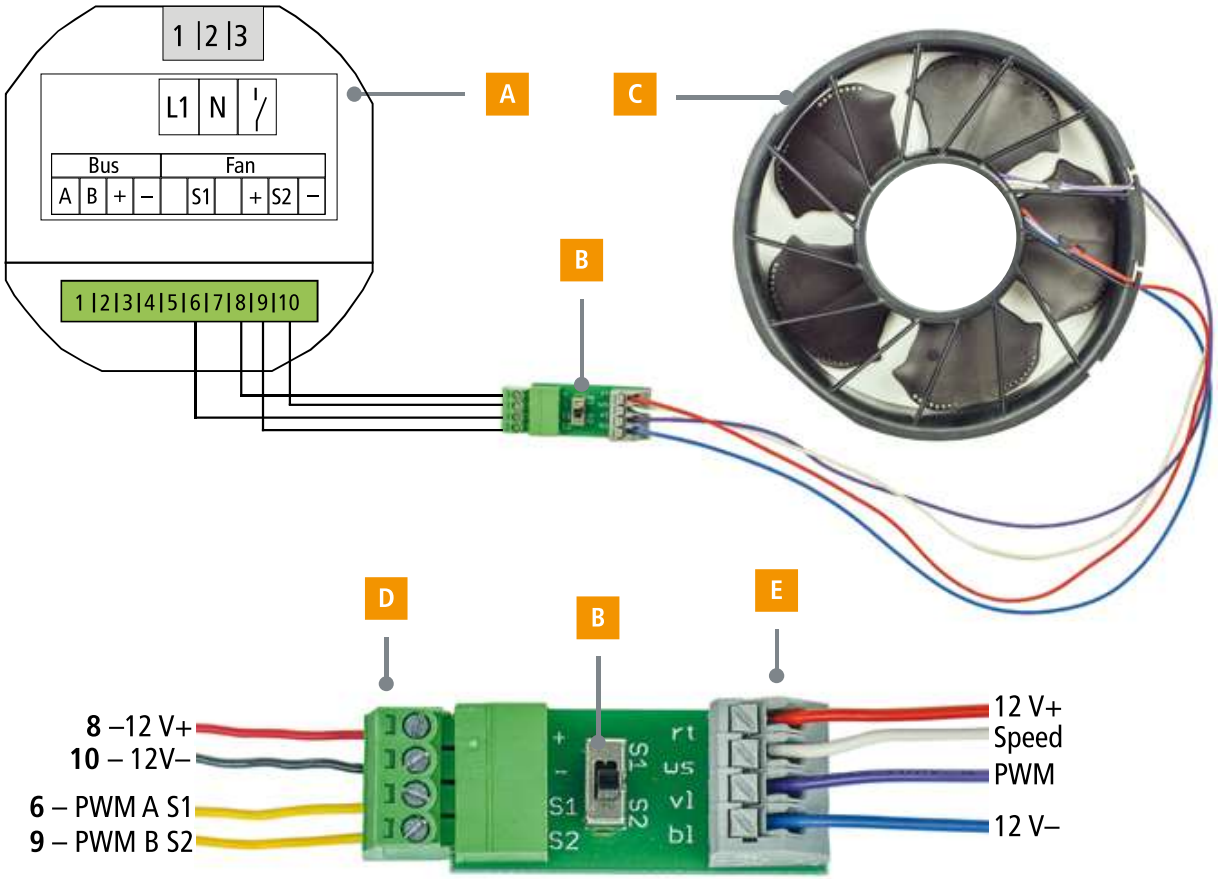

A maximum of 6 **AIRUNIT** SOLUS 2.0^{SE} ventilation units can be operated with the **AIRUNIT** control 2.0.
An extension with two extension sets up to 18 units is possible.

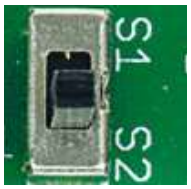

The toggle switch (B) can be used to determine the air direction in cross-ventilation mode:
S1 = Exhaust air unit
S2 = Supply air unit

5.3 Connecting the AIRUNIT GEMINI ventilation unit(s) to the control unit 2.0

When using **AIRUNIT** GEMINI units, the connection is made via terminals **1** to **4** (BUS).
It is not necessary to assign the air direction.
A maximum of 4 **AIRUNIT** GEMINI ventilation units can be operated with the **AIRUNIT** control 2.0.
For this purpose, a maximum of 2 **GEMINI** ventilation units must be connected in parallel to plug connection **1** (**RS485-A**), **2** (**RS485-B**) , **3** (**12V Bus**), **4** (**GND**)(**BUS**) and connected to the unit electronics of the respective ventilation unit:

- **A** **AIRUNIT** control 2.0
- **B** DIP switch
- **C** Connections for ventilation units **AIRUNIT** GEMINI (upper / lower fan)

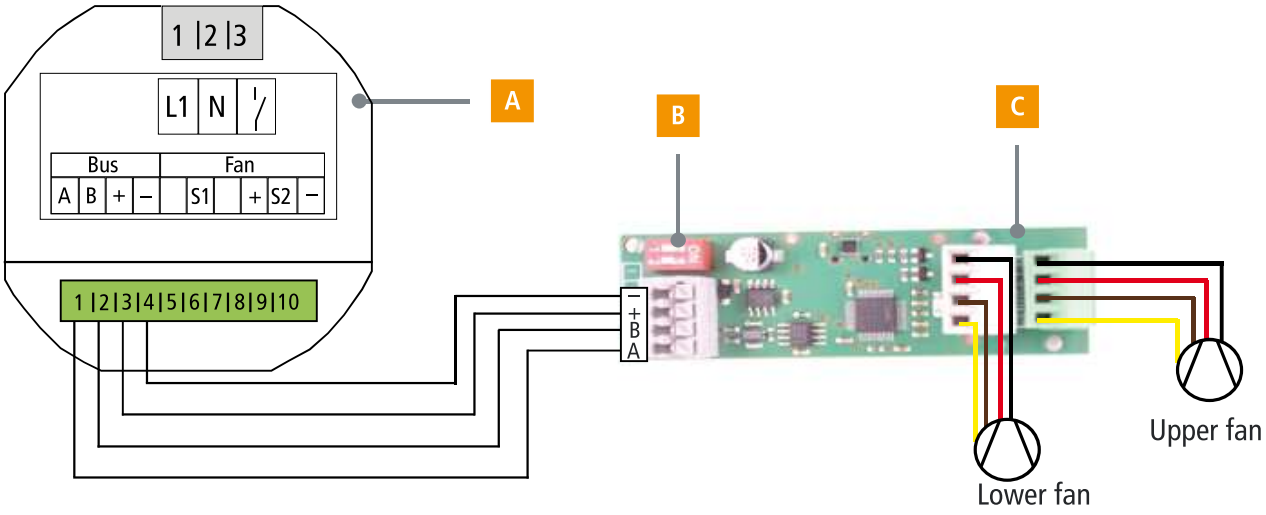

The **AIRUNIT** GEMINI ventilation units are connected to the BUS line of the **AIRUNIT** control 2.0 centrally at the unit electronics. Both fans are connected to the plug connections of the unit electronics and the unit address is assigned.

Attention!	**Each address may only be assigned once per ventilation unit! Be sure to note assignments to address settings in the commissioning and maintenance log!**

5.4 AIRUNIT SOLUS 2.0 with extension set

Attention!	Masses (minus) of the extension set and the control 2.0 must be connected. **+12V** for **Fan4-9** is supplied via the extension set. A maximum of 10 **AIRUNIT** SOLUS 2.0 ventilation units can be operated with the **AIRUNIT** control 2.0. A maximum of 6 ventilation units may be operated with an extension set.

A **AIRUNIT** control 2.0
B **AIRUNIT** SOLUS 2.0
C **AIRUNIT** extension set

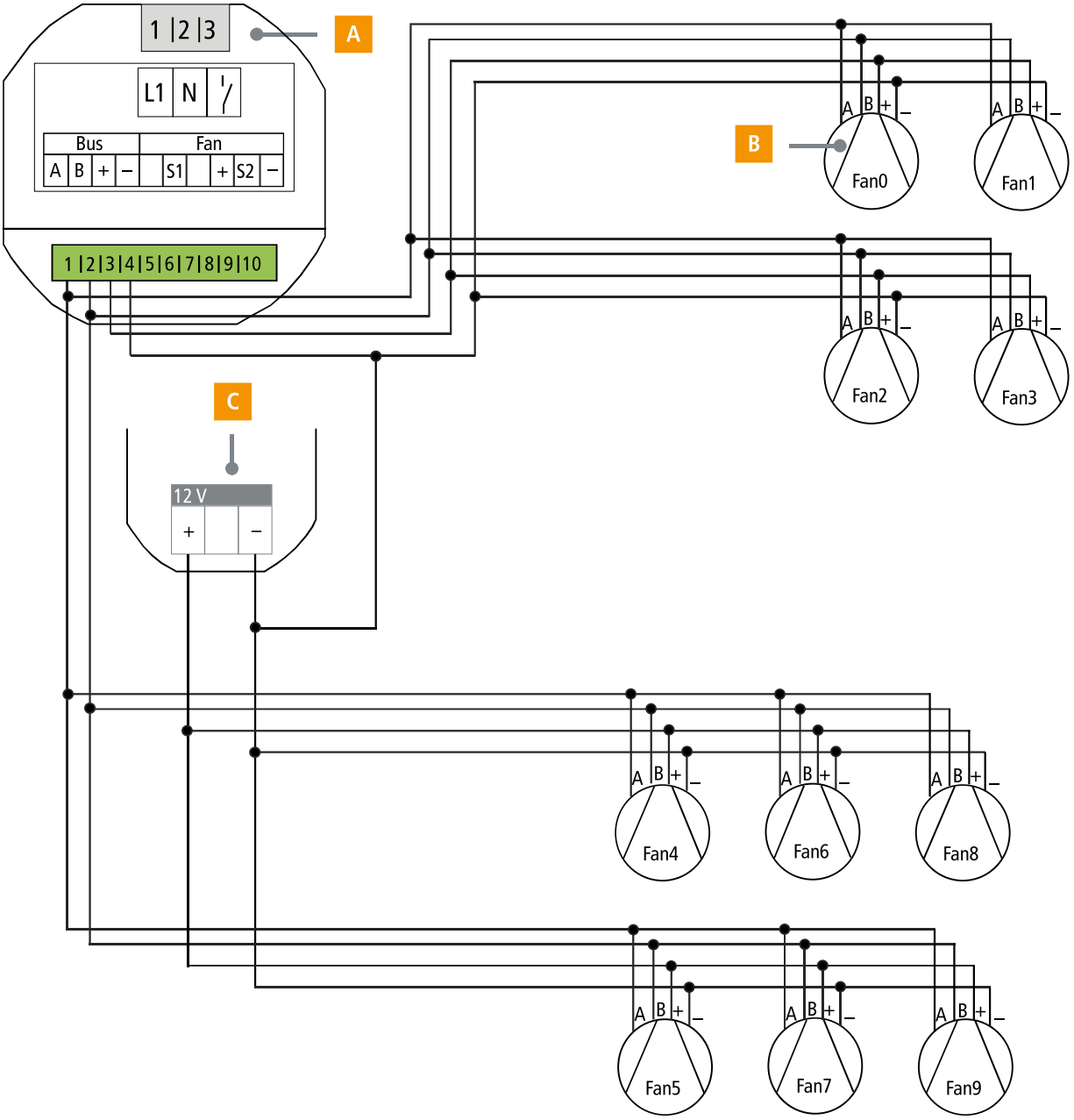

5.5 AIRUNIT SOLUS 2.0^{SE} with extension set

Attention!	Masses (minus) of the extension set and the control 2.0 must be connected. **+12V** for **Fan4-9** is supplied via the extension set. A maximum of 18 **AIRUNIT** SOLUS 2.0^{SE} ventilation units can be operated with the **AIRUNIT** control 2.0. A maximum of 6 ventilation units may be operated with an extension set.

A **AIRUNIT** control 2.0
B **AIRUNIT** SOLUS 2.0^{SE}
C **AIRUNIT** extension set

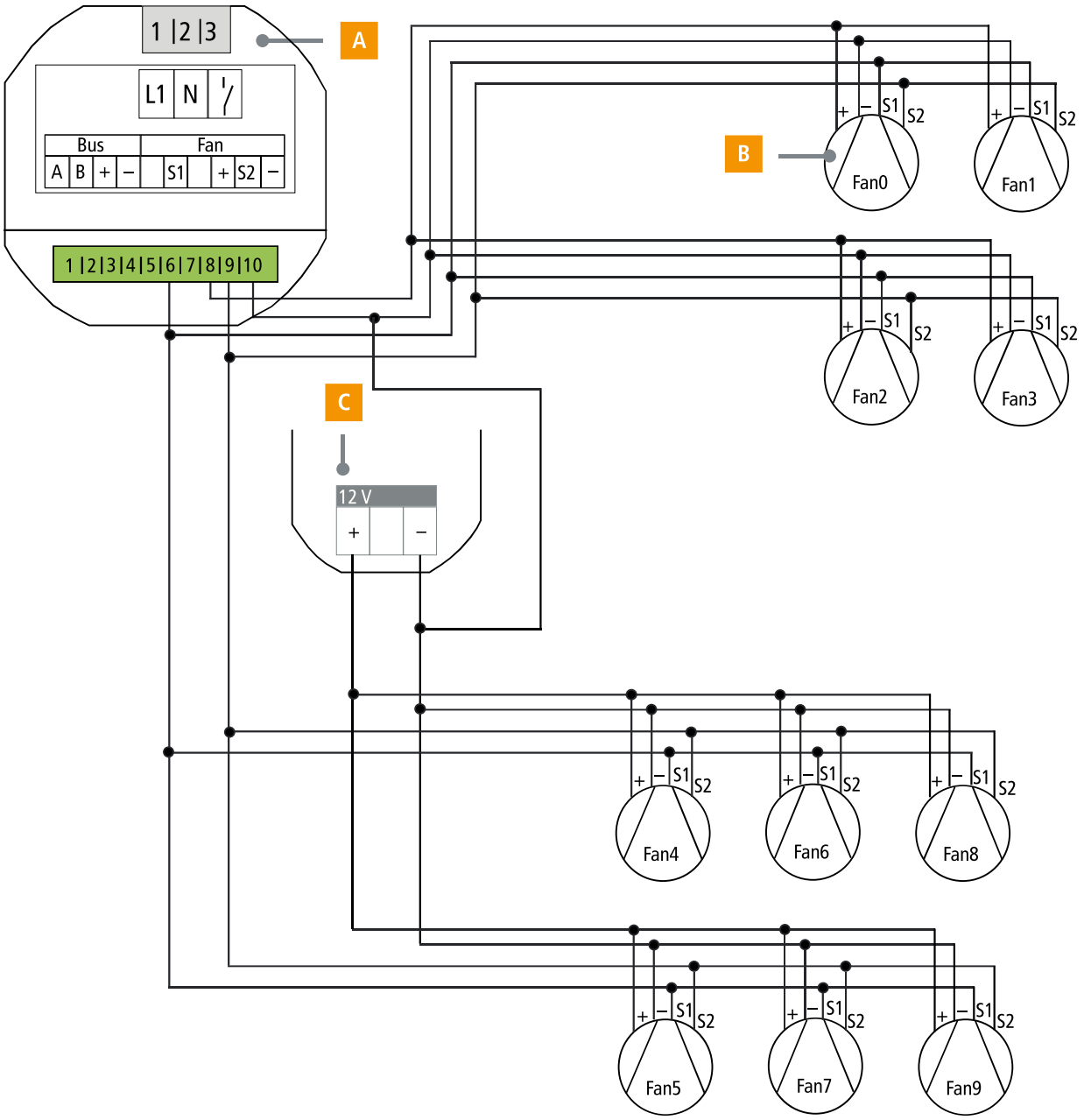

5.6 AIRUNIT GEMINI

Attention!	A maximum of 4 **AIRUNIT** GEMINI can be connected to the plug connections **1** (**RS485-A**), **2** (**RS485-B**), **3** (**12V bus**) and **4** (**GND**)(**BUS**). If you want to operate more than 4 **AIRUNIT** GEMINI, please plan an additional **AIRUNIT** control 2.0.

A **AIRUNIT** control 2.0
B **AIRUNIT** GEMINI

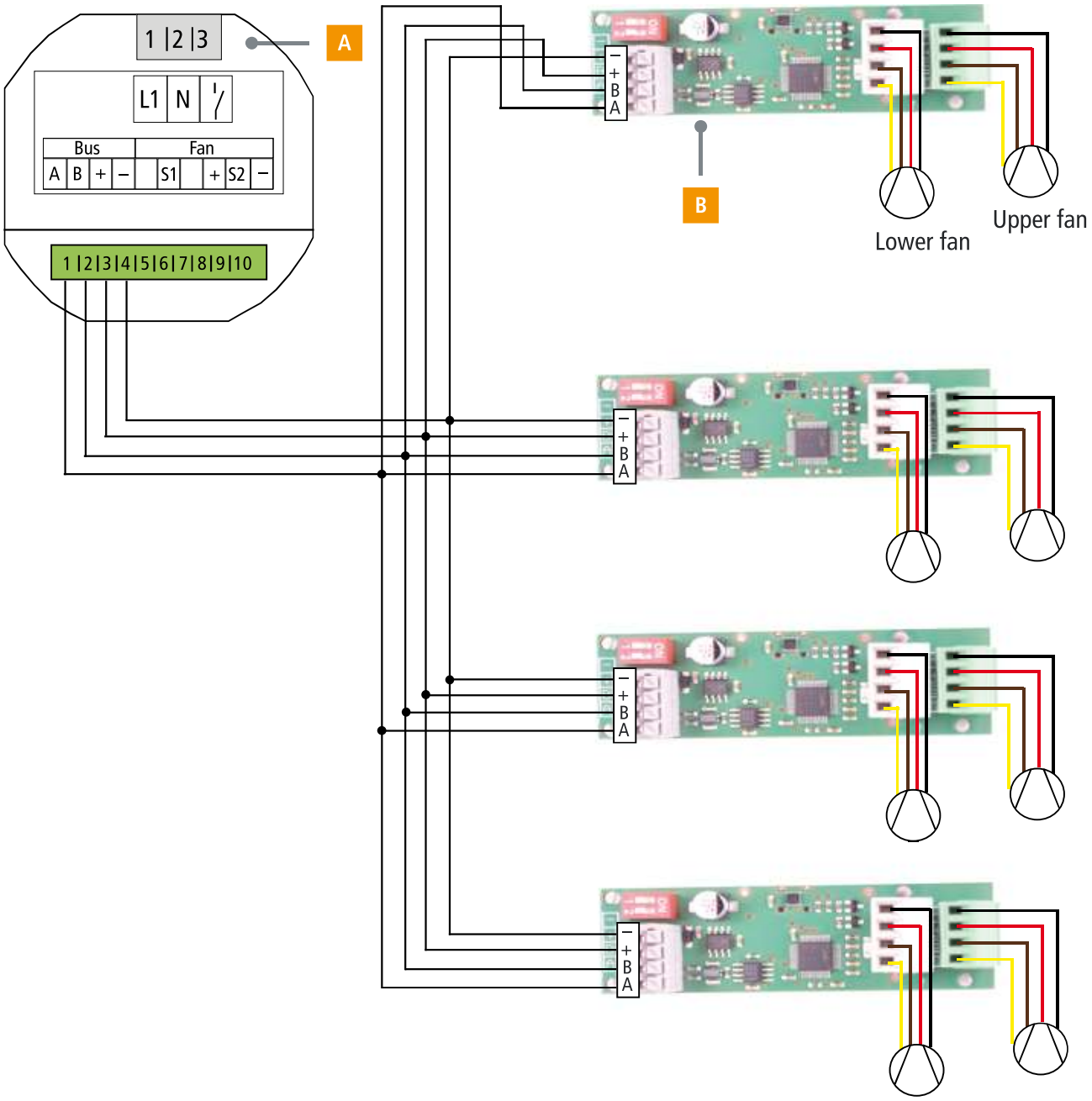

5.7 AIRUNIT SOLUS 2.0 and AIRUNIT GEMINI with extension set

Attention!	Masses (minus) of the extension set and the control 2.0 must be connected. The **AIRUNIT** SOLUS 2.0 units (**Fan0-3**) are supplied with 12 V via the extension set. Connect **AIRUNIT** GEMINI 1+2 to the plug connections **1** (**RS485-A**), **2** (**RS485-B**), **3** (**12V bus**) and **4** (**GND**)(**BUS**). Connect **AIRUNIT** GEMINI 3 to the plug connections **1** (**RS485-A**), **2** (**RS485-B**) of the control 2.0 and to the contacts **+12V** and **–** (earth) of the extension set.

A **AIRUNIT** control 2.0
B **AIRUNIT** GEMINI
C **AIRUNIT** extension set
D **AIRUNIT** SOLUS 2.0

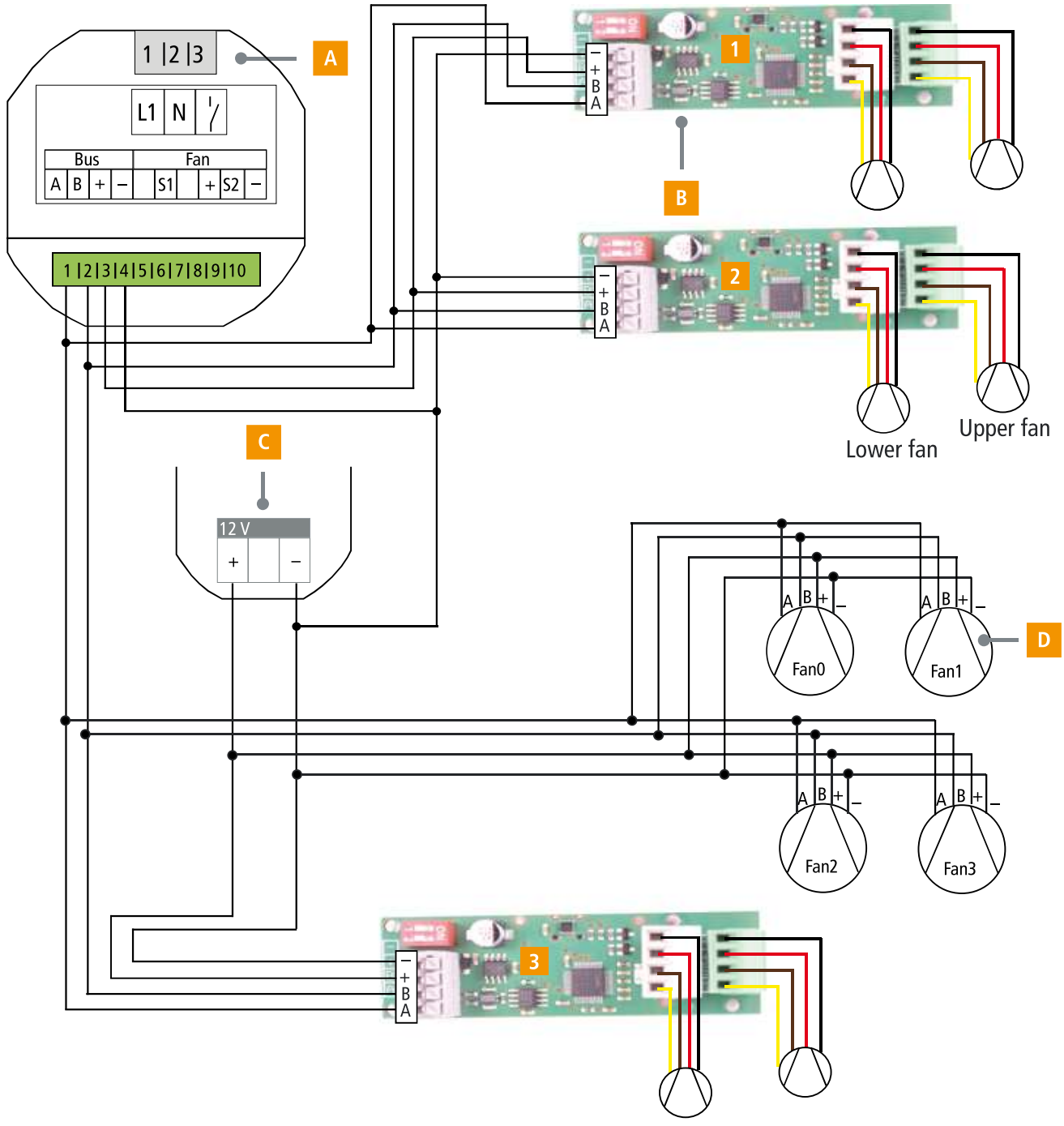

5.8 AIRUNIT SOLUS 2.0^{SE} and AIRUNIT GEMINI with extension set

Attention!	Masses (minus) of the extension set and the control 2.0 must be connected. The **AIRUNIT** SOLUS 2.0^{SE} units (**Fan0-3**) are supplied with 12 V via the extension set. Connect **AIRUNIT** GEMINI 1+2 to the plug connections **1** (**RS485-A**), **2** (**RS485-B**), **3** (**12V bus**) and **4** (**GND**)(**BUS**). Connect **AIRUNIT** GEMINI 3 to the plug connections **1** (**RS485-A**), **2** (**RS485-B**) of the control 2.0 and to the contacts **+12V** and **–** (earth) of the extension set.

A **AIRUNIT** control 2.0
B **AIRUNIT** GEMINI
C **AIRUNIT** extension set
D **AIRUNIT** SOLUS 2.0^{SE}

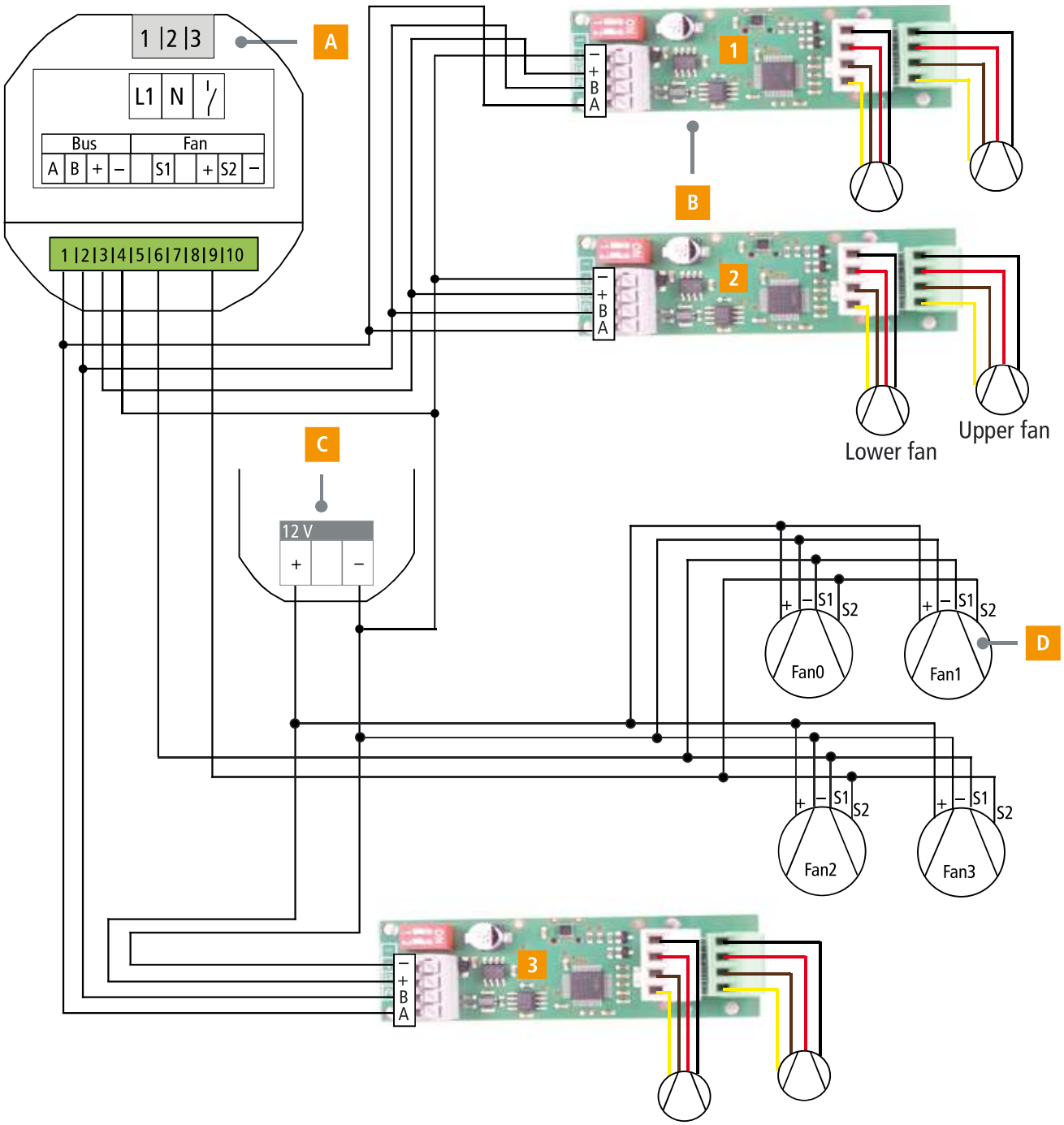

5.9 Overview matrix AIRUNIT SOLUS 2.0

	No GEMINI	1x GEMINI	2x GEMINI	3x GEMINI	4x GEMINI
No SOLUS 2.0		✓ (A)	✓ (A)	✓ (A)	✓ (A)
2x SOLUS 2.0	✓ (A)	✓ (A)	✓ (A)	✓ (B)	✓ (B)
4x SOLUS 2.0	✓ (A)	✓ (A)	✓ (B)	✓ (B)	✓ (B)
6x SOLUS 2.0	✓ (A)	✓ (B)	✓ (B)	✓ (B)	✓ (B)
8x SOLUS 2.0	✓ (B)	✓ (B)	✓ (B)	✓ (B)	X
10x SOLUS 2.0	✓ (B)	X	X	X	X
12x SOLUS 2.0	X	X	X	X	X
14x SOLUS 2.0	X	X	X	X	X
16x SOLUS 2.0	X	X	X	X	X
18x SOLUS 2.0	X	X	X	X	X

A No extension set necessary

B 1 extension set necessary

5.10 Overview matrix AIRUNIT SOLUS 2.0[SE]

	No GEMINI	1x GEMINI	2x GEMINI	3x GEMINI	4x GEMINI
No SOLUS 2.0		✓ (A)	✓ (A)	✓ (A)	✓ (A)
2x SOLUS 2.0	✓ (A)	✓ (A)	✓ (A)	✓ (B)	✓ (B)
4x SOLUS 2.0	✓ (A)	✓ (A)	✓ (B)	✓ (B)	✓ (B)
6x SOLUS 2.0	✓ (A)	✓ (B)	✓ (B)	✓ (B)	✓ (B)
8x SOLUS 2.0	✓ (B)	✓ (B)	✓ (B)	✓ (B)	✓ (C)
10x SOLUS 2.0	✓ (B)	✓ (C)	✓ (C)	✓ (C)	✓ (C)
12x SOLUS 2.0	✓ (C)	✓ (C)	✓ (C)	✓ (C)	✓ (C)
14x SOLUS 2.0	✓ (C)	✓ (C)	✓ (C)	✓ (C)	✓ (C)
16x SOLUS 2.0	✓ (C)	X	X	X	X
18x SOLUS 2.0	✓ (C)	X	X	X	X

A No extension set necessary
B 1 extension set necessary
C 2 extension sets necessary

6. Bathroom fan operation

6.1 External digital input

Attention!	**It is imperative that the input as well as the ventilation unit are supplied electrically from the same phase, otherwise an impermissibly high voltage will be applied to the unit and the unit will be destroyed!**

The external digital input is a **230 V AC** input and can be used to balance exhaust air volume flows when operating bathroom fans. The external input is connected in parallel to the bathroom fan.
While the bath fan is active, a disbalance of supply air flow rate 30 m³/h and exhaust air line 15 m³/h per unit is used instead of the standard air flow rates, whereby the exhaust air volume flow of the bath fan can be compensated.

If you have connected an **AIRUNIT** GEMINI, the external digital input can be used to set the **AIRUNIT** GEMINI to extract air mode (40 m³/h). The external digital input is activated via a switch.
While the extract air mode of the **AIRUNIT** GEMINI is active, a disbalance is used for connected **AIRUNIT** SOLUS 2.0 and **AIRUNIT** SOLUS 2.0^{SE} ventilation units, a disbalance of supply air output 30 m³/h and extract air output 15 m³/h per unit is used instead of the standard air outputs, whereby the extract air volumetric flow of the **AIRUNIT** GEMINI can be compensated.

A **AIRUNIT** control 2.0
B Light switch

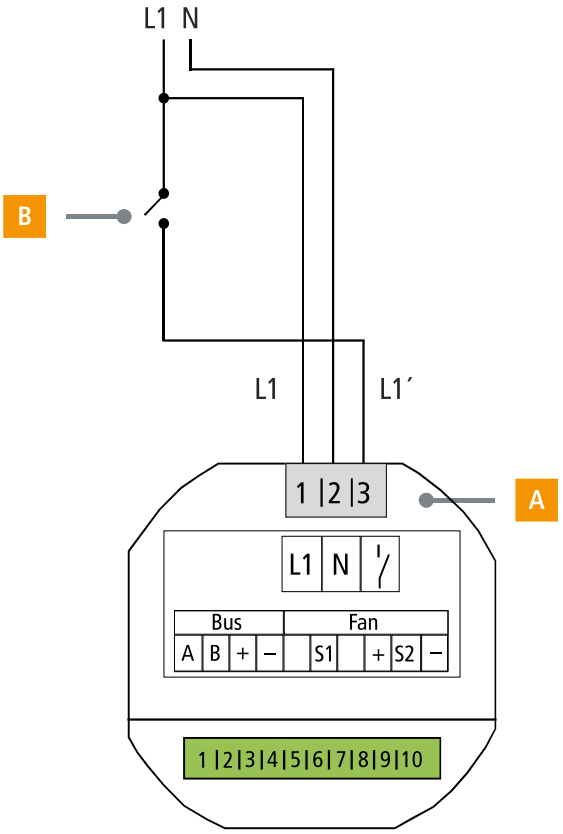

7. Sensor operation with external air quality sensors

Various air quality sensors (max. 4 sensors) can be connected to the **AIRUNIT** control 2.0 via the integrated bus interface of the unit. The digital air quality sensors transmit their measured values to the control unit. Based on these values, the ventilation unit can increase or reduce the air stages as required.
The number of connected sensors must be set via the control element (see chapter **Activating the number of connected air quality sensors**). The type of sensor is recognised automatically and the appropriate threshold values are then used. Depending on the air quality (e.g. humidity), the air levels are automatically increased or decreased. If the air level is lowered manually, the demand-controlled ventilation is deactivated for a period of 60 minutes. The connected external sensors control all connected **AIRUNIT** SOLUS 2.0 and GEMINI ventilation units.

A **AIRUNIT** control 2.0

B Air quality sensor (up to max. 4 sensors!)

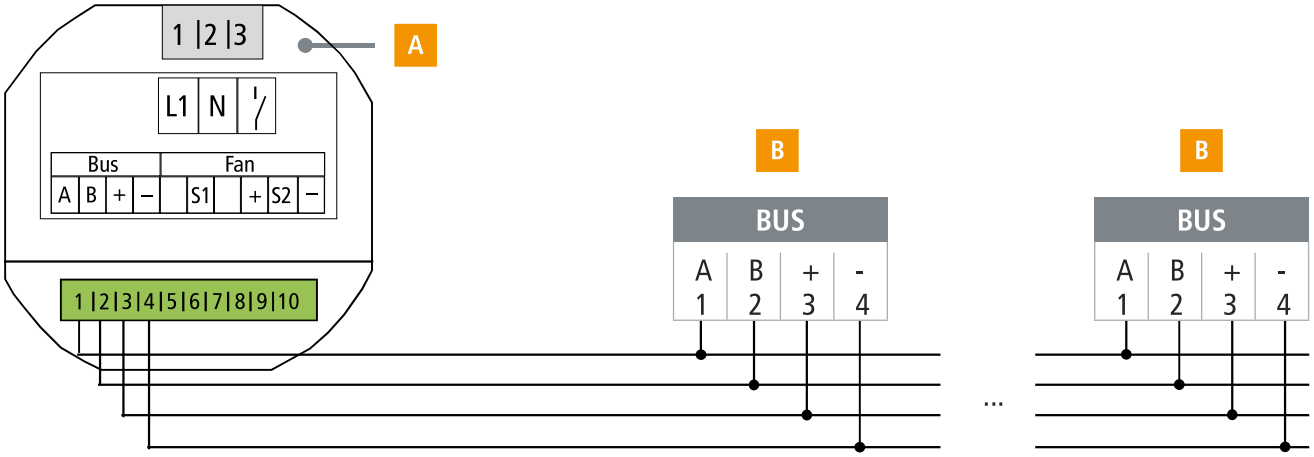

8. Settings

8.1 Set rotary coding switch



When connecting several **AIRUNIT** SOLUS 2.0 ventilation units, the address must be set on the rotary coding switch. The air direction can be assigned at this switch.

Attention!	**Each address can only be assigned once. A maximum of 10 AIRUNIT SOLUS 2.0 ventilation units can be operated in one system. Be sure to note assignments to address settings in the commissioning and maintenance log!**

Address	Zone	Function
A		
B		
C		
D		
E		
F		
0	1	Supply air (delivery state)
1	1	Exhaust air
2	2	Supply air
3	2	Exhaust air
4	3	Supply air
5	3	Exhaust air
6	4	Supply air
7	4	Exhaust air
8	5	Supply air
9	5	Exhaust air

8.2 Activating connected AIRUNIT SOLUS 2.0 ventilation units

The number of **AIRUNIT** SOLUS 2.0 ventilation units is activated in the configuration menu as follows:

1

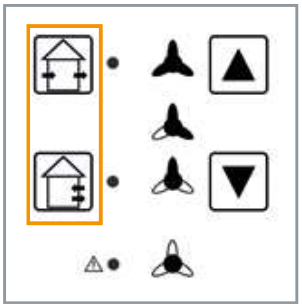

Press and **simultaneously for 5 seconds** to access the configuration menu.

2

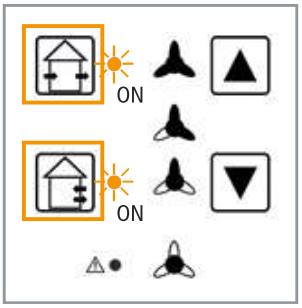

Press and individually to select the combination of LEDs as shown.

3

	No SOLUS 2.0	1 x SOLUS 2.0	2 x SOLUS 2.0
	OFF ○	OFF ○	OFF ○
	OFF ○	OFF ○	OFF ○
	OFF ○	ON ●	ON ●
	ON ●	OFF ○	ON ●

	3 x SOLUS 2.0	4 x SOLUS 2.0	5 x SOLUS 2.0
	OFF ○	OFF ○	OFF ○
	ON ●	ON ●	ON ●
	OFF ○	OFF ○	ON ●
	OFF ○	ON ●	OFF ○

	6 x SOLUS 2.0	7 x SOLUS 2.0	8 x SOLUS 2.0
	OFF ○	ON ●	ON ●
	ON ●	OFF ○	OFF ○
	ON ●	OFF ○	OFF ○
	ON ●	OFF ○	ON ●

	9 x SOLUS 2.0	10 x SOLUS 2.0
	ON ●	ON ●
	OFF ○	OFF ○
	ON ●	ON ●
	OFF ○	ON ●

Press and individually to select the combination of LEDs as shown.

4



A Press and hold the button to save.

Flashes on when storage is successful.

B Press and hold the button to exit the configuration menu.

8.3 Set DIP switch

When connecting several **AIRUNIT** GEMINI, the address must be set on the DIP switch.

Attention!	**Each address can only be assigned once. A maximum of 4 AIRUNIT GEMINI ventilation units can be operated in one system.**

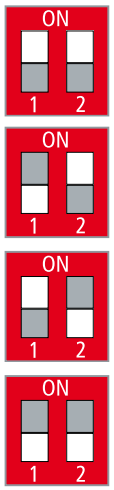

1 OFF | 2 OFF (factory setting)

1 ON | 2 OFF

1 OFF | 2 ON

1 AN | 2 AN

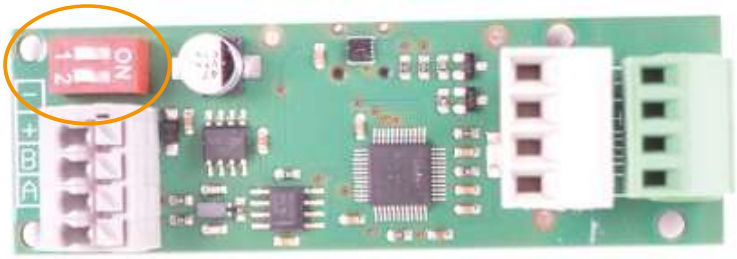

8.4 Activate connected AIRUNIT GEMINI ventilation units

The number of **AIRUNIT** GEMINI ventilation units is activated in the configuration menu as follows:

1

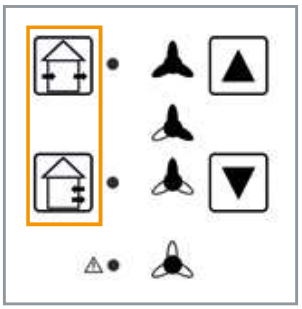

Press and **simultaneously for 5 seconds** to enter the configuration menu.

2

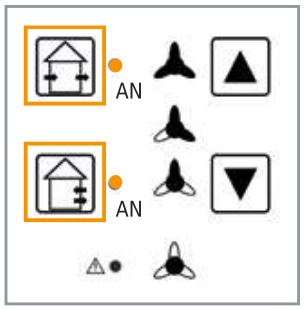

Press and individually to select the combination of LEDs as shown.

3

	Keine GEMINI	1 x GEMINI	2 x GEMINI
	OFF ○	OFF ○	OFF ○
	OFF ○	OFF ○	ON ●
	OFF ○	ON ●	OFF ○
	OFF ○	OFF ○	OFF ○

	3 x GEMINI	4 x GEMINI
	OFF ○	ON ●
	ON ●	OFF ○
	ON ●	OFF ○
	OFF ○	OFF ○

Press ▲ and ▼ individually to select the combination of LEDs as shown.

4



A Press and hold to save.

☀ Flashes on when storage is successful.

B Press and hold to exit the configuration menu.

8.5 Activate connected air quality sensors

The number of connected air quality sensors is activated in the configuration menu as follows:

1



Press and **simultaneously for 5 seconds** to enter the configuration menu.

2

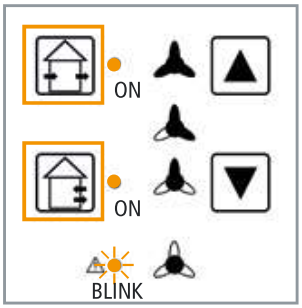

Press and individually to select the combination of LEDs as shown.

3

	No Sensor	1 Sensor	2 Sensors
	OFF ○	OFF ○	OFF ○
	OFF ○	OFF ○	ON ●
	OFF ○	ON ●	OFF ○
	OFF ○	OFF ○	OFF ○

	3 Sensors	4 Sensors
	OFF ○	ON ●
	ON ●	OFF ○
	ON ●	OFF ○
	OFF ○	OFF ○

Press ▲ and ▼ individually to select the combination of LEDs as shown.

4



A Press and hold to save.

☀ Flashes on when storage is successful.

B Press and hold to exit the configuration menu.

8.6 Automatic bypass

The **AIRUNIT** SOLUS 2.0 has an automatic bypass function. If the indoor and outdoor temperatures equalise within a specified temperature range, heat recovery operation is no longer necessary.
The alternating push-pull operation is deactivated and the cross-ventilation operation is activated (no switching of the fans). If the temperatures rise/fall above the specified values, the system switches back to heat recovery operation (push-pull) to prevent the building from cooling down or overheating.
The operating range of this automatic bypass can be set via the configuration and commissioning software, which is available separately.

8.7 Set ventilation mode

The operating variants of the **AIRUNIT** ventilation systems are set via the control panel of the **AIRUNIT** control 2.0. Two basic functions with different fan outputs can be set:

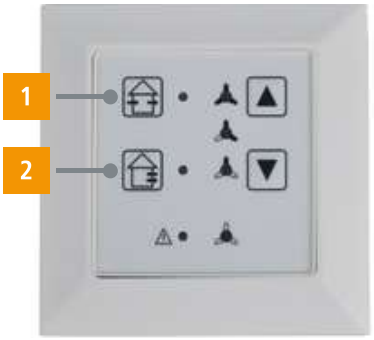

1 Function "Summer mode"
(supply or exhaust air operation without heat recovery)

2 Function"Winter mode"
(supply air or extract air operation with heat recovery)

8.7.1 Function "Summer mode"

In this setting, the **AIRUNIT** SOLUS 2.0 operates constantly in supply or extract air mode. Heat recovery does not take place. After 8 hours, the unit automatically switches to winter mode with heat recovery.

Operating mode: For the **AIRUNIT** SOLUS 2.0 the operating mode is set by the position on the rotary coding switch, for the **AIRUNIT** SOLUS 2.0^{SE} by the position of the toggle switch (**S1**, **S2**). The unit can be operated as a supply air or extract air unit (see chapter **Electrical connection**).

Supply air units in "summer mode"

Exhaust air units in "summer mode"



In this setting, one fan of the **AIRUNIT** GEMINI operates constantly in supply air mode and the other fan constantly in extract air mode. Heat recovery does not take place. After 8 hours, the system automatically switches to winter mode with heat recovery.

AIRUNIT GEMINI ventilation system:



8.7.2 Function "Winter mode"

The **AIRUNIT** SOLUS 2.0 ventilation unit(s) operate(s) alternately in adjusted time intervals. In the first interval (exhaust air phase), the "used" room air is discharged to the outside via the ventilation unit. The air flows through the ceramic heat accumulator, which absorbs and stores the heat of the room air. In the second interval (supply air phase), "fresh" outside air is conveyed into the room via the ventilation unit. The outside air also flows through the heat accumulator, absorbs the previously stored heat and supplies it to the room again. When the **AIRUNIT** SOLUS 2.0 ventilation units are used in pairs, the units of a pair work in opposite directions: The first unit in supply air mode and the second unit in extract air mode, and in the next interval vice versa. In this way, the **AIRUNIT** SOLUS 2.0 achieves a heat recovery of up to 99%.

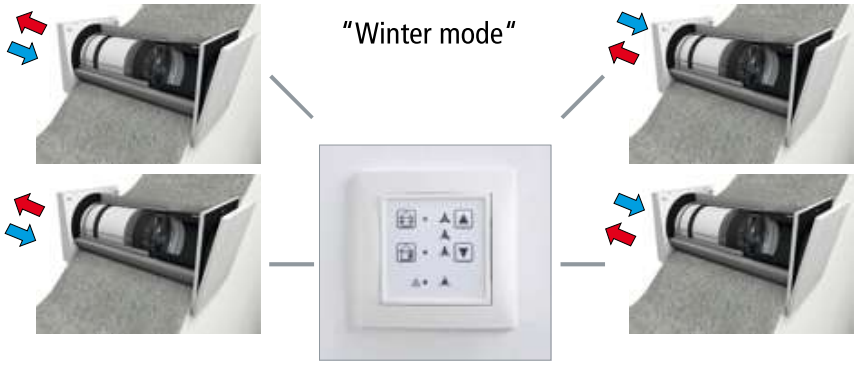

The fans of the **AIRUNIT** GEMINI ventilation unit(s) work in opposite directions in 2 adjusted time intervals. The function of the heat recovery is illustrated by means of a fan. In the first interval (exhaust air phase), the "used" room air is discharged to the outside via the ventilation unit. The air flows through the ceramic heat accumulator, which absorbs and stores the heat of the room air.
In the second interval (supply air phase), "fresh" outside air is delivered into the room via the ventilation unit.
The outside air also flows through the heat accumulator, absorbs the previously stored heat and feeds it back into the room. The fans of the **AIRUNIT** GEMINI ventilation units work in opposite directions, i.e. the first unit in supply air mode and the second unit in extract air mode; in the next interval vice versa, so that there is always a balanced supply air and extract air volume flow. In this way, heat recovery of up to 98% is achieved.

AIRUNIT GEMINI ventilation system:



8.7.3 Function "Exhaust air mode" AIRUNIT GEMINI

The **AIRUNIT** GEMINI automatically selects the air stages depending on the measured humidity and automatically increases or decreases the ventilation stage. Exhaust air mode is automatically activated at the maximum air stage. This results in an extract air volume flow of 40 m³/h. If the **AIRUNIT** GEMINI operates in extract air mode, connected **AIRUNIT** SOLUS 2.0 ventilation units go into disbalance with a supply air flow rate of 30 m³/h and extract air flow rate of 15 m³/h, whereby the extract air volume flow rate of the **AIRUNIT** GEMINI can be compensated. Conversely, if you activate the disbalance via the digital input of the control 2.0, the **AIRUNIT** GEMINI also goes into extract air mode.

9. Maintenance

9.1 Filter insert

DANGER



Risk of electric current injury!
There is a risk of injury from electric current.

- Before carrying out electrical work, the power supply must be disconnected and secured against reconnection.
- The device is not ready for operation when delivered and must first be connected by a qualified electrician.
- The electrical installation may only be carried out by competent persons in accordance with the applicable legal requirements.
- The installation must comply with national and/or local electrical regulations.
- A residual current switch (rated residual current ≤ 30 mA) is required for each circuit.

9.1.1 Remove filter insert from AIRUNIT SOLUS 2.0 / SOLUS 2.0^{SE}

To check the filter, the inner panel of the ventilation unit must be pulled slightly upwards and forwards. The plug connection of the connecting cable must be disconnected. The fan unit can then be removed from the wall duct. Remove the filter for any cleaning that may be necessary.



In case of light soiling (no or low dust precipitation), the filter insert can be vacuumed or beaten out. In the case of heavy dust precipitation, the filter insert can be rinsed with warm water (approx. 40° C) and a household mild detergent. If possible, the filter should not be tumbled. Allow the cleaned filter insert to dry completely before reinserting it into the ventilation unit; dust will precipitate immediately on a damp filter! To ensure continued good filtration, filter replacement is necessary at the latest when the fibre structure is destroyed.



Reinsert the dried filter insert into the fan unit and assemble the **AIRUNIT** ventilation unit in reverse order. After checking/cleaning the filter insert and switching on the voltage supply of the AIRUNIT ventilation unit again, the operating time measurement for monitoring the filter insert must be restarted. The restart is carried out via the control panel of the **AIRUNIT** control.



The operating time measurement is restarted by pressing the "UP" and "DOWN" buttons together. Keep both buttons pressed until the red LED "Filter change / malfunction" goes out (approx. 5 seconds). The filter monitoring can also be restarted as described above without first displaying the filter change indicator, e.g. as part of a regular inspection.

The request for a filter check is issued depending on time and volume flow. The actual contamination of the filter is not taken into account. However, depending on the degree of contamination, an earlier filter change may be advisable. It is therefore recommended to check the filter insert at three-monthly intervals during the first year after commissioning the **AIRUNIT** ventilation unit and to shorten the inspection/cleaning interval if the filter is visibly very dirty.

9.1.2 Remove filter insert AIRUNIT GEMINI

To check the filter, the inner panel of the ventilation unit must be removed. The plug connection of the connection cable must be disconnected. Then the fan units can be removed from the wall duct. Remove the filter for any cleaning that may be required.



In case of light soiling (no or low dust precipitation), the filter insert can be vacuumed or beaten out. In the case of heavy dust precipitation, the filter insert can be rinsed with warm water (approx. 40° C) and a household mild detergent. If possible, the filter should not be tumbled. Allow the cleaned filter insert to dry completely before reinserting it into the ventilation unit; dust will precipitate immediately on a damp filter! To ensure continued good filtration, filter replacement is necessary at the latest when the fibre structure is destroyed.



Reinsert the dried filter insert into the fan unit and assemble the **AIRUNIT** ventilation unit in reverse order. After checking/cleaning the filter insert and switching on the voltage supply of the **AIRUNIT** ventilation unit again, the operating time measurement for monitoring the filter insert must be restarted. The restart is carried out via the control panel of the **AIRUNIT** control.



The operating time measurement is restarted by pressing the "UP" and "DOWN" buttons together. Keep both buttons pressed until the red LED "Filter change / malfunction" goes out (approx. 5 seconds). The filter monitoring can also be restarted as described above without first displaying the filter change indicator, e.g. as part of a regular inspection.

The request for a filter check is issued depending on time and volume flow. The actual contamination of the filter is not taken into account. However, depending on the degree of contamination, an earlier filter change may be advisable. It is therefore recommended to check the filter insert at three-monthly intervals during the first year after commissioning the **AIRUNIT** ventilation unit and to shorten the inspection/cleaning interval if the filter is visibly very dirty.

10. Operating hours counter

The ventilation unit has an integrated operating hours counter.

1

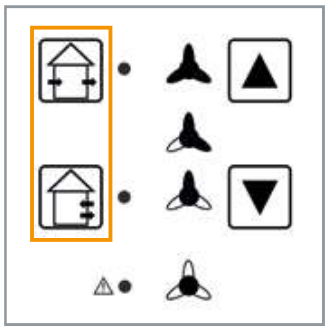

Press and hold both buttons **simultaneously for 5 seconds** to enter the configuration menu.

2

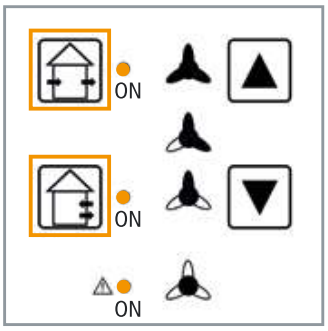

By pressing the **left-hand buttons** individually, select the combination of left-hand LEDs as shown.

3

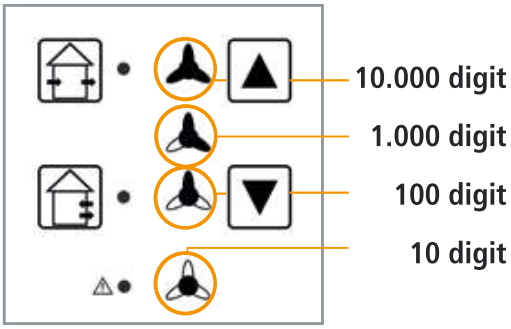

4

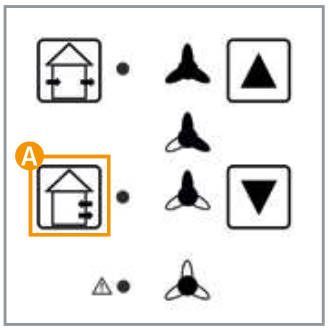

Ⓐ Press and hold to exit the configuration menu.

The display of the operating hours shows the sum of the operating hours in which the unit was operated in an air stage of at least humidity protection. The display is done via the number of flashing pulses of the individual LEDs. The led for humidity protection represents the 10th digit of the operating hours. The led for reduced ventilation represents the 100s digit. The LED for nominal ventilation represents the 1000s digit. The LED for intensive ventilation represents the 10000 digit. The number of flashes goes from 0 to 9. Starting with the lowest LED, the LEDs flash through their flashing patterns one after the other. After one cycle, the display starts again with the 10s digit.

11. Troubleshooting

No.	Error	Flash code	Measure
1	Filter change	permanent luminaires	Change filter
2	Self test error	2 flashes – pause	Contact dealer
3	Communication fault sensor	3 flashes – pause	Check wiring
4	Temperature error	4 flashes – pause	Check the number of connected units

12. Technical data

AIRUNIT control 2.0		
Operating modes	Winter and summer mode, pause / off	
Switch range	Cover frame included, cannot be combined with other switch ranges	
Degree of protection	IP20	
Protection class	III	
Power supply	200 – 250 Vac, 50/60 Hz	
Standby power consumption	< 0.5 W	
Digital input	100 – 250 Vac, 50/60 Hz	
Bus connection	RS-485, USB	
Outputs	2x 12V, 0.75 A | 2x 0-5 V PWM	
Dimensions	80 x 80 x 49 mm	
Operating temperature	0 – 45 °C	

Power levels	AIRUNIT SOLUS 2.0 / SOLUS 2.0^{SE}	AIRUNIT GEMINI
Power level 0	OFF	OFF
Power level 1	10 m³/h	5 m³/h
Power level 2	15 m³/h	10 m³/h
Power level 3*	21 m³/h	21 m³/h
Power level 4	30 m³/h	30 m³/h
Power level 5	40 m³/h	40 m³/h Exhaust air mode

* Measuring point 0.7 x qvd

CE

EU Konformitätserklärung *EU Declaration of Conformity*

Regelung *controller*

Hersteller *Manufacturer*:

mfh systems GmbH
Hager Feld 8
49191 Belm
Fon +49 (0) 54 06 | 6 99 95-10
Fax +49 (0) 54 06 | 6 99 95-90

Der Unterzeichnete bestätigt hiermit, dass das (die) nachfolgend bezeichnete(n) Gerät(e) den nachfolgenden einschlägigen EU-Richtlinien entspricht. Bei jeder Änderung des (der) Gerät(e)s verliert diese Erklärung ihre Gültigkeit.

The undersigned hereby certifies that the following device(s) complies/comply with the applicable EU directives. This certification loses its validity if the device(s) is/are modified.

Bezeichnung

AIRUNIT Regelung 2.0

Designation

AIRUNIT Control 2.0

EU-Richtlinien *EU Directives*

EMV-Richtlinie 2014/30/EU
Niederspannungs-Richtlinie 2014/35/EU
RoHS-Richtlinie 2011/65/EU

Angewandte Normen *Applied standards*

EN 61000-3-3:2008
DIN EN IEC 61000-6-1 VDE 0839-6-1:2019-11
EN 60335-1

Belm, 07.02.2022



Austellungsort und Datum
Place and Date of issue

Daniel Schuschan
Geschäftsführerender Gesellschafter | Shareholder MD

Notes

Energy Carbon Ltd
Kemp House,
152 - 160 City Road,
London EC1V 2NX

Tel+44203 507 1659

hello@energycarbon.co.uk

