air:unit
Decentralised MVHR

Produkt- und Systemübersicht **AIRUNIT**

Dezentrale Wohnraumlüftung für Neubau und Sanierung

Product overview AIRUNIT

Decentralised ventilation for new buildings and renovations

Stand Oktober 2024 | Status October 2024



Energy Carbon Ltd









TOP 100 top100.de Top-Innovator 2022

FAMILIENFREUNDLICHE ARBEITGEBER OSNABRÜCK

Technologie | Innovation | Verantwortung

Den höchsten Stellenwert im Unternehmen hat die technologieoffene Entwicklung moderner und ressourcenschonender Systeme rund um die Flächenheizung und -kühlung sowie Wohnraumlüftung. Unterschiedliche Gebäudetypen bedingen individuelle Systemlösungen für maximale Effizienz und hohen Komfort.

Neue Wege zu gehen und innovative Gedanken zu verfolgen, um den Status quo in Bezug auf Kosten, Effizienz und Komfort zu verbessern ist ein wesentlicher Bestandteil der täglichen Arbeit im Unternehmen.

Als inhabergeführtes Unternehmen stehen wir jeden Tag in der Verantwortung für unsere Kunden, Lieferanten, Mitarbeiter und Familien. Das machen wir gerne und handeln nach sozialen sowie umweltgerechten Leitlinien.

Technology | Innovation | Responsibility

The company attaches the greatest importance to the development of modern and resource-conserving systems for panel heating and cooling as well as domestic ventilation that are open to new technologies. Different types of buildings require individual system solutions for maximum efficiency and high comfort.

Breaking new ground and pursuing innovative ideas to improve the status quo in terms of costs, efficiency and comfort is an essential part of the company's daily work.

We, as an owner-managed company, are responsible every day. For our customers, suppliers, employees and families. We are happy to do this and act according to social and environmental guidelines.

mfh Produktvielfalt | mfh product range



IDEAL CLASSIC EPS

Flächenheizung- und kühlung für Boden, Wand & Decke – schnell reagierende & energiesparende Bedarfsheizung

Surface heating and cooling for floor, wall & ceiling – fast reacting & energy saving heating on demand

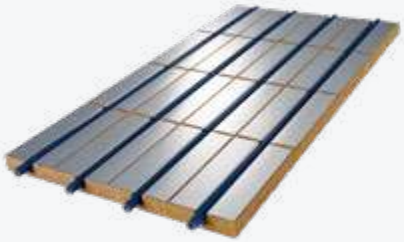

IDEAL CLASSIC ÖKO

Die ökologische Flächenheizung und -kühlung hat zusätzlich eine schalldämmende Wirkung

The ecological surface heating and cooling has an additional sound-absorbing effect



COMPACT FLOOR

Wärmeleitschichten für Fußbodenheizungen – innovative Trockenestriche und Entkopplungen

Thermal conductive layers for floor heating systems – innovative dry screeds and decoupling



E-NERGY IQ

Intelligentes Heizsystem – Innovativer Energieboden für Neubau & Sanierung

Intelligent heating system – Innovative energy floor for new buildings & renovation



E-NERGY CARBON

Elektrische Heizfolien auf 36 Volt-Basis für den Einbau in Decke, Wand und Boden

Electrical heating foils on 36 Volt basis for installation in ceiling, wall and floor



AIRUNIT

Dezentrale Wohnraumlüftung – Push-Pull-Lüftungssystem mit Wärmerückgewinnung

Decentralised residential ventilation – push-pull ventilation system with heat recovery

Hinweise

Lieferung ab Werk
Preisliste ohne MwSt.
Es gelten die allgemeinen Geschäftsbedingungen

Instructions

Delivery ex works
Price list without VAT
The general terms and conditions apply

Inhalt | Content

Produktsortiment | *Product portfolio*

AIRUNIT SOLUS 2.0

AIRUNIT SOLUS 18
AIRUNIT SOLUS 2.0 SE 20
Technische Details | *Technical details* 22
Auslegungsbeispiel | *Design example* 23
Zubehör Innenblenden TURN | *Accessories TURN Interior panels* 24

AIRUNIT GEMINI

AIRUNIT GEMINI 28
Technische Details | *Technical details* 30
Auslegungsbeispiel | *Design example* 31
Übersicht AIRUNIT Lüftungsgeräte | *Overview AIRUNIT Ventilation Units* 32

REGELUNGSSYSTEME | *CONTROL SYSTEMS*

Regelungen verdrahtet | *Wired controller* 36
Auslegungsbeispiel | *Design example* 37

KELLERLÜFTUNG | *BASEMENT VENTILATION*

Kellerlüftung | *Basement ventilation* 38

SONSTIGES | *OTHER*

Angebotsformular | *Quotation form* 40
Allgemeine Geschäftsbedingungen | *General terms and conditions* 42

AIRUNIT – FRISCHE LUFT IM GANZEN HAUS

WOHNRAUMLÜFTUNG MIT WÄRMERÜCKGEWINNUNG

AIRUNIT – FRESH AIR IN THE WHOLE HOUSE

LIVING ROOM VENTILATION WITH HEAT RECOVERY







INDOOR-AIR-QUALITY

Die **AIRUNIT** Wohnraumlüftungssysteme garantieren gesunde Luft zum Leben. Da wir den größten Teil des Tages in geschlossenen Räumen verbringen, ist es umso wichtiger sicherzustellen, dass ausreichend frische und gefilterte Luft verfügbar ist.

INDOOR-AIR-QUALITY ***AIRUNIT*** *indoor ventilation systems guarantee healthy air for living. Since we spend most of the day indoors, it is even more important to ensure that sufficient fresh and filtered air is available.*



FEUCHTESCHUTZ

Gut gedämmte Gebäude, ob Neubau oder Sanierung, benötigen einen sicheren Luftwechsel. Mit den **AIRUNIT** Wohnraumlüftungssystemen wird die Feuchtigkeit aus dem Gebäude kontrolliert abgeführt und Schimmel effektiv vermieden.

MOISTURE PROTECTION *Well-insulated buildings, whether new builds or renovations, require a reliable air exchange. With AIRUNIT domestic ventilation systems, moisture is removed from the building in a controlled manner and mould is effectively prevented.*



ENERGIEEINSPARUNG

Die **AIRUNIT** Wohnraumlüftungssysteme stellen den notwendigen Luftwechsel sicher. Durch die integrierte Wärmerückgewinnung werden dabei unnötige Wärmeverluste reduziert und wertvolle Energie gespart.

ENERGY SAVING ***AIRUNIT*** *residential ventilation systems ensure the necessary air exchange. The integrated heat recovery reduces unnecessary heat loss and saves valuable energy.*

» AIRUNIT

Die **AIRUNIT** Wohnraumlüftungssysteme mit Wärmerückgewinnung arbeiten nach dem Push-Pull-Prinzip.

In definierten Zeitabständen dreht der Ventilator die Drehrichtung und lädt bzw. entlädt mit dem Zu- oder Abluftstrom den effizienten Wärmetauscher.

Durch den dezentralen Betrieb der einzelnen Geräte ohne das sonst notwendige Kanalsystem ist das **AIRUNIT**-System sowohl in Neu- als auch in Altbauten sehr effizient!

AIRUNIT *domestic ventilation systems with heat recovery work according to the push-pull principle.*

At defined time intervals, the fan turns the direction of rotation and charges or discharges the efficient heat exchanger with the supply or exhaust air flow.

Due to the decentralised operation of the individual devices without the otherwise necessary duct system, the ***AIRUNIT*** *system is very efficient in both new and old buildings!*

Hohe Energie-Einsparung bis zu 99 % Wärmerückgewinnung
High energy savings of up to 99 % heat recovery

Flüster leiser Betrieb ab 11 db(A)
Whisper-quiet operation from 11 db(A)

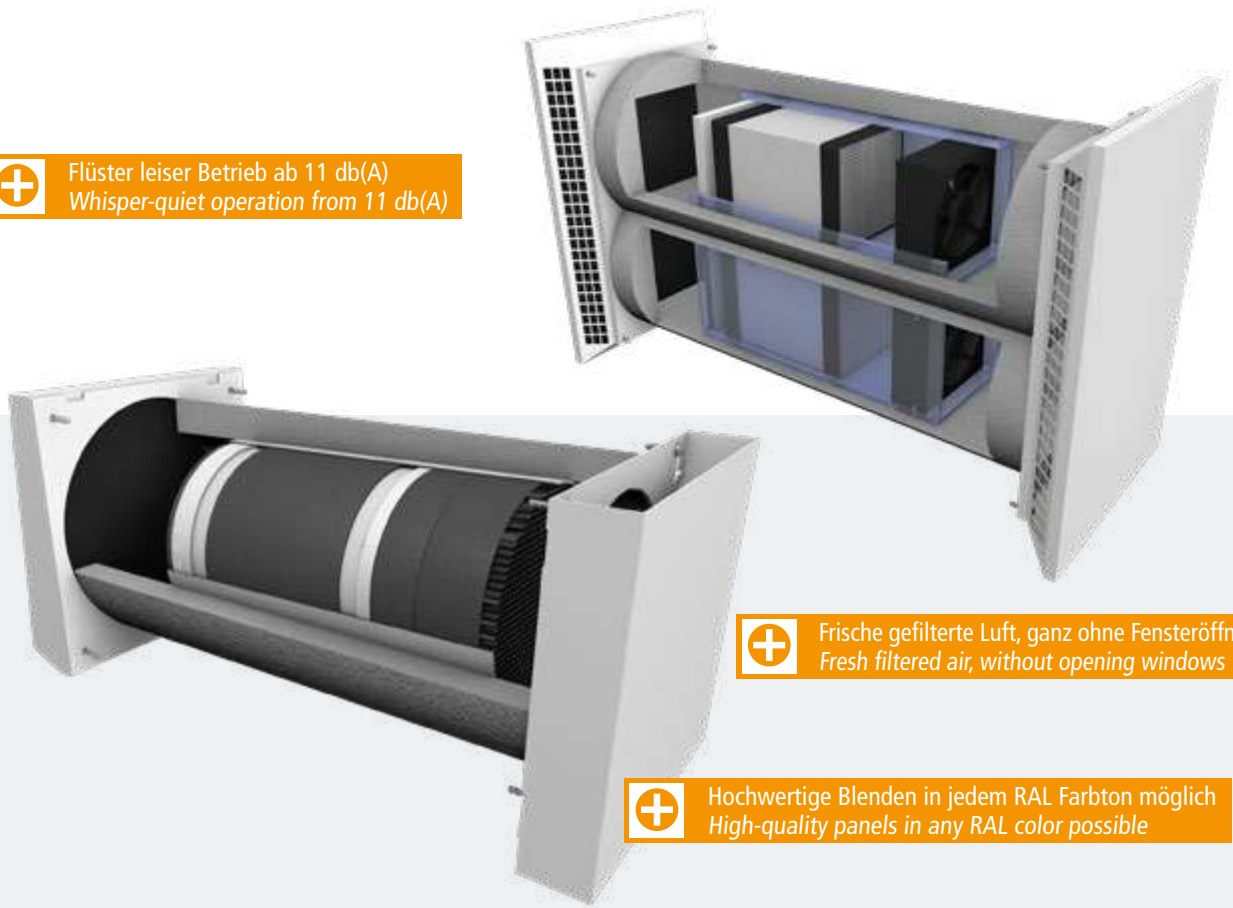

Frische gefilterte Luft, ganz ohne Fensteröffnen
Fresh filtered air, without opening windows

Hochwertige Blenden in jedem RAL Farbton möglich
High-quality panels in any RAL color possible

Problemloser Einbau bei Neubauten und Sanierungen
Simple installation for new construction projects and renovations

» GEDÄMMTE EINBAUHÜLSE
INSULATED INSTALLATION SLEEVE

Die Energieeffizienz spielt besonders bei den lüftungstechnischen Maßnahmen eine wichtige Rolle. Die **AIRUNIT** Wohnraumlüftungssysteme verfügen über eine gedämmte Einbauhülse. Dadurch wird die Unit, insbesondere der Wärmetauscher thermisch vom umgebenen Mauerwerk entkoppelt.

*Energy efficiency plays a particularly important role in ventilation measures. The **AIRUNIT** residential ventilation systems have an insulated installation sleeve. This thermally decouples the unit, especially the heat exchanger, from the surrounding masonry.*



» HOHE WÄRMERÜCKGEWINNUNG VON BIS ZU 99 %
UP TO 99 % HEAT RECOVERY

Ziel der **AIRUNIT** ist es, die Wärmeverluste trotz kontinuierlicher Belüftung zu verringern. Durch das abgestimmte Konzept der Systemtechnik können im operativen Betrieb bis zu 99 % der Wärme erhalten bleiben.

*The aim of the **AIRUNIT** is to reduce heat loss despite continuous ventilation. Due to the coordinated concept of the system technology, up to 99 % of the heat can be retained during operation.*



» GEPRÜFT, ZUGELASSEN UND FÖRDERFÄHIG
TESTED, CERTIFIED AND ELIGIBLE

Die Qualität der **AIRUNIT** sowie der technischen Angaben werden extern überwacht. Alle **AIRUNIT** Wohnraumlüftungssysteme sind bauaufsichtlich geprüft und zugelassen, was eine Voraussetzung für die Förderfähigkeit ist.

*The quality of **AIRUNIT** as well as the technical specifications are externally monitored. All **AIRUNIT** residential ventilation systems are tested and approved by building authorities, which is a prerequisite for eligibility for subsidies.*

Nach DIBT-Richtlinien geprüft

Tested acc. to DIBT guidelines

Deutsches Institut für Bautechnik DIBt





» VORTEILE *ADVANTAGES*

- ✓ Gesundes Raumklima durch regelmäßigen Luftaustausch

  Healthy room climate through regular air exchange

- ✓ Filtern der Außenluft von Schmutz, Pollen und Staub – ideal für Allergiker

  Filter the outside air from dirt, pollen and dust – ideal for allergy sufferers

- ✓ Energiesparend dank hoher Wärmerückgewinnung

  Energy-saving thanks to high heat recovery

- ✓ Reduzierung der Heizkosten im Vergleich zur Fensterlüftung

  Reduction of heating costs compared to window ventilation

- ✓ Schutz der Bausubstanz vor Feuchtigkeitsschäden

  Protection of the building fabric against moisture damage

- ✓ Vermeidung von Schimmelbildung durch Regulierung der Luftfeuchtigkeit

  Prevention of mould formation by regulating the humidity

» FÜR JEDEN RAUM DIE PASSENDE LÖSUNG – AIRUNIT SOLUS 2.0 UND GEMINI

» *THE RIGHT SOLUTION FOR EVERY ROOM – AIRUNIT SOLUS 2.0 AND GEMINI*



» NEUE TECHNOLOGIEN FÜR JEDEN EINSATZBEREICH
NEW TECHNOLOGIES FOR EVERY FIELD OF APPLICATION

Die **AIRUNIT** Wohnraumlüftungssysteme sind flexibel und praxisnah einsetzbar. Egal ob im Ein-, Zwei- oder Mehrfamilienhaus, die **AIRUNIT** Lüftungseinheiten arbeiten immer energieffizient und komfortorientiert. Neben dem Neubau sind insbesondere Sanierungen durch die kanalfreie Installation einfach und schnell durchführbar und gewährleisten frische und gesunde Luft im ganzen Haus.

*The **AIRUNIT** residential ventilation systems are flexible and practical. Regardless of whether in a detached house or apartment building, the **AIRUNIT** ventilation units always work in an energy-efficient and comfort-oriented manner. In addition to new buildings, renovations in particular can be carried out quickly and easily thanks to the duct-free installation and guarantee fresh and healthy air throughout the house.*

Altbau
Old building



Neubau
New building



Einfamilienhaus
Detached house



Mehrfamilienhaus
Apartment house



Tiny House
Tiny House



Container / Modulabauten
Container/Modular buildings



Holzhäuser
Wooden houses



Apartment im Eigentum
Flat in property



» AIRUNIT

Die **AIRUNIT**-Wohnraumlüftungssysteme mit Wärmerückgewinnung arbeiten nach dem **Push-Pull-Prinzip**, bei dem der Ventilator in regelmäßigen Intervallen die Drehrichtung ändert und den Wärmetauscher mit Zu- oder Abluft belädt bzw. entlädt.

AIRUNIT-Systeme eignen sich ideal für Neubauten und Nachrüstungen. Sie bieten intelligente Steuerung, hohen Wohnkomfort und bis zu 99 % Wärmerückgewinnung. Die Lüftungssysteme sind so leise, dass sie den Schlaf nicht stören. Außerdem lassen sie sich flexibel an die Raumgröße und den Luftbedarf anpassen.

***AIRUNIT** residential ventilation systems with heat recovery work according to the push-pull principle, in which the fan changes direction of rotation at regular intervals and supplies or discharges the heat exchanger with supply or extract air.*

AIRUNIT systems are ideal for new builds and retrofits. They offer intelligent control, a high level of living comfort and up to 99 % heat recovery. The ventilation systems are so quiet that they do not disturb your sleep. They can also be flexibly adapted to the room size and air requirements.

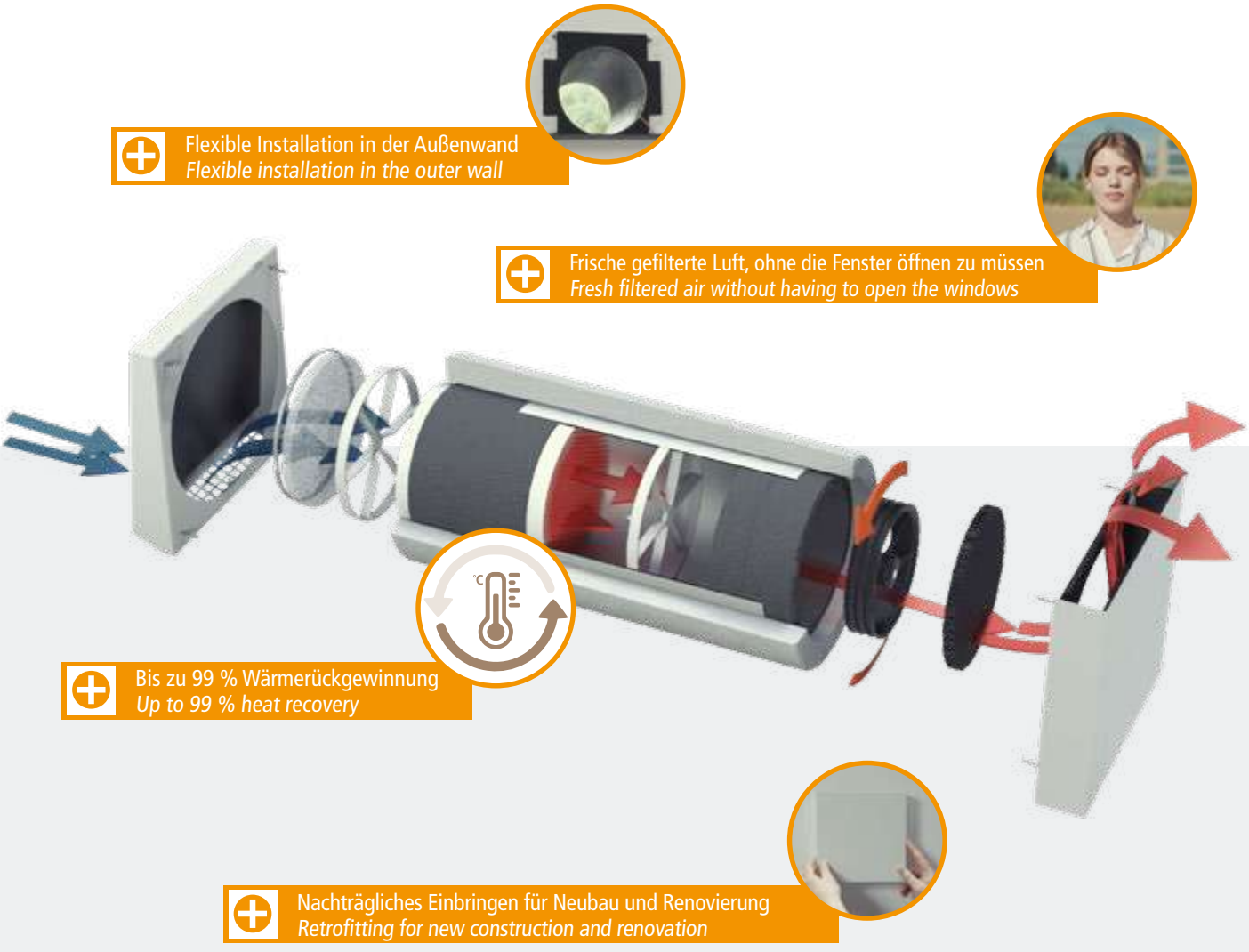

System AIRUNIT

VIDEO













AIRUNIT SOLUS 2.0 / 2.0 SE

air:unit
Decentralised MVHR

Die **AIRUNIT SOLUS** Lüftungsgeräte sind auf Ihre Bedürfnisse zugeschnitten: Individuelle Montage entsprechend der gegebenen Wohnsituation. Neben der normgerechten Belüftung der gesamten Wohneinheit ist auch die Belüftung einzelner Räume möglich.Die **AIRUNIT SOLUS 2.0** ist mit integrierten Luftqualitätssensoren ausgestattet, die verschiedene Parameter wie Luftfeuchtigkeit und Temperatur überwachen. Die **SOLUS 2.0** SE verfügt über diese spezifischen Sensoren nicht.

***AIRUNIT SOLUS** ventilation units are customised to your needs: Customised installation according to the given living situation. In addition to standardised ventilation of the entire residential unit, it is also possible to ventilate individual rooms. **AIRUNIT SOLUS 2.0** is equipped with integrated air quality sensors that monitor various parameters such as humidity and temperature. **The SOLUS 2.0** SE does not have these specific sensors.*

1 Bis zu 99 % Wärmerückgewinnung
Up to 99 % heat recovery



2 Einfaches Nachrüsten durch dezentrale Montage
Easy retrofitting due to decentralised installation

3 Gedämmtes (thermisch entkoppeltes) Rohbau-Set mit integriertem Gefälle
Insulated (thermally decoupled) shell set with integrated slope

Nach DIBT-Richtlinien geprüft
Tested acc. to DIBT guidelines

TZWL EUROPÄISCHES TESTZENTRUM FÜR WOHNUNGSLÜFTUNGSGERÄTE EV

Deutsches Institut für Bautechnik DIBt

DEUTSCHES INSTITUT FÜR PRODUKT UND MARKTBEWERTUNG GMBH
ausgezeichnet für: EXZELLENTE PRODUKT-QUALITÄT 2024
www.dipmb.de/fundstelle/

PLUS X AWARD
2023 | Ausgezeichnet für:
Innovation
High Quality
Bedienkomfort
Funktionalität
www.plusxaward.de













AIRUNIT SOLUS 2.0

- Bis zu 10 Geräte gleichzeitig an einer Regelung – Flexibilität in kleinen und großen Wohneinheiten. *Up to 10 devices simultaneously on one control unit - flexibility in small and large residential units.*
- Integrierte Sensorik in jedem Gerät, ermöglicht einen Automatikbetrieb für Feuchte, Temperatur und Taupunkt. *Integrated sensors in each device enable automatic operation for humidity, temperature and dew point.*
- Wärmebereitstellungsgrad von bis zu 99 % *Heat supply efficiency of up to 99 %*

12 V /DC	260 x ø 154 mm *260 x ø 154 mm*				ab 11 dB(A) *from 11 dB(A)*	

AIRUNIT SOLUS 2.0 SE

- Bis zu 18 Geräte gleichzeitig an einer Regelung – Flexibilität in großen Wohneinheiten oder vergleichbaren Bauten *Up to 18 devices simultaneously on one control unit - flexibility in large residential units or comparable buildings*
- Abgestimmter Betrieb mit Abluftventilatoren ohne Zusatzmodul, dadurch einheitliches Regelungskonzept *Coordinated operation with extract air fans without additional module, resulting in a standardised control concept*
- Wärmebereitstellungsgrad von bis zu 99 % *Heat supply efficiency of up to 99 %*

12 V /DC	260 x ø 154 mm *260 x ø 154 mm*			ab 11 dB(A) *from 11 dB(A)*	

» ÜBERSICHT SOLUS 2.0 UND SOLUS SE
OVERVIEW SOLUS UND SOLUS SE

	SOLUS 2.0	SOLUS 2.0 SE
Modulierende Arbeitsweise Feuchte / Taupunkt / Temperatur *Automatic operation humidity / dew point / temperature*	●	●
SEV-Klasse / Spezifischer Energieverbrauch [kWh/m²a] *SEC Specific energy consumption [kWh/m²a]*	A+	A
Wärmerückgewinnung maximal *Maximum heat recovery*	99 %	99 %
Schallemission ab (Schallleistungspegel) *Noise emission (alternatively sound power level)*	11 db(A)	11 db(A)
Max Einheiten pro Regelung *Max units per control*	6 Stk	6 Stk
Max Einheiten mit zusätzlichem Erweiterungs-Set *Max units with additional extension set*	10 Stk	18 Stk

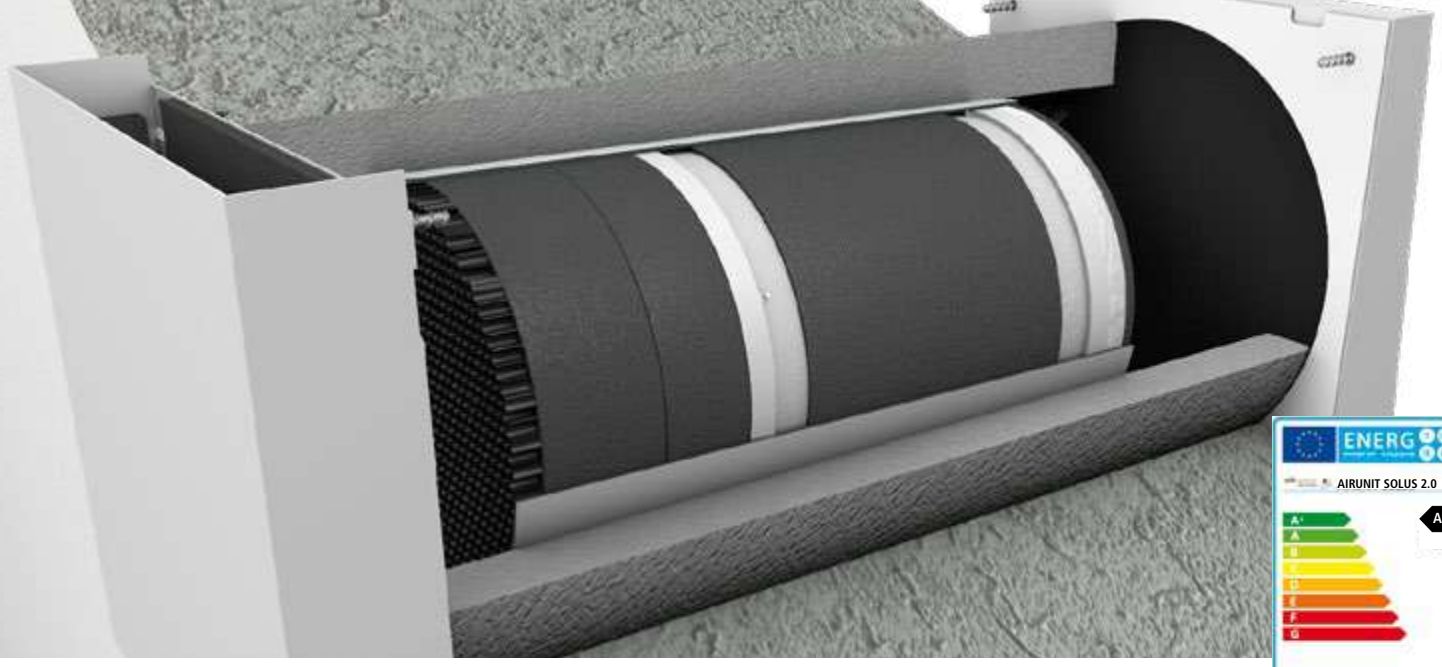

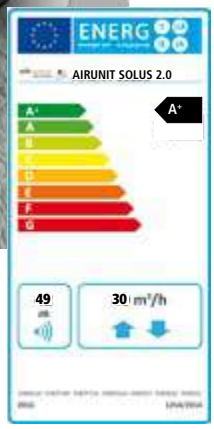

AIRUNIT SOLUS 2.0

Komplett-Set | Complete set

	Artikel *Article*	Art-Nr. *Item-no.*	VPE *PU*	Preis/Stk. *Price/Item*
	Komplettset AIRUNIT SOLUS 2.0, 500 (Inkl. Rohbauset 500, Installationsset, Außenhaube weiß, Innenblende CUBE) *Complete set AIRUNIT SOLUS 2.0, 500 (Incl. shell set 500, installation set, outer hood white, inner panel CUBE)*	4 01 021	1 Stk. *1 pcs.*	640,00 £ *640.00 £*
	Komplettset AIRUNIT SOLUS 2.0, 500 Edelstahl (Inkl. Rohbauset 500, Installationsset, Außenhaube Edelstahl, Innenblende CUBE) *Complete set AIRUNIT SOLUS 2.0, 500 stainless steel (Incl. shell set 500, installation set, outer hood stainless steel, inner panel CUBE)*	4 01 022	1 Stk. *1 pcs.*	710,00 £ *710.00 £*

Rohbau-Sets | Shell-sets

	Artikel *Article*	Abmessung (LxBxH) *Dimensions (LxWxH)*	Art-Nr. *Item-no.*	VPE *PU*	Preis/Stk. *Price/Item*
	Rohbau-Set 160 mm ungedämmt rund *Shell set 160 mm uninsulated round*	500 x ø 160 mm *500 x ø 160 mm*	4 01 049	1 Stk. *1 pcs.*	45,00 £ *45.00 £*
	Rohbau-Set 500 eckig *Shell set 500 square*	500 x 210 x 210 mm *500 x 210 x 210 mm*	4 01 050	1 Stk. *1 pcs.*	55,00 £ *55.00 £*
	Rohbau-Set 500 rund *Shell set 500 round*	497,5 x ø 198 mm *497.5 x ø 198 mm*	4 01 051	1 Stk. *1 pcs.*	55,00 £ *55.00 £*
	Rohbau-Set 1.000 rund *Shell set 1,000 round*	1.000 x ø 198 mm *1,000 x ø 198 mm*	4 01 052	1 Stk. *1 pcs.*	85,00 £ *85.00 £*
	Keller-Set *Basement set*	497,5 x ø 198 mm *497.5 x ø 198 mm*	4 01 030	1 Stk. *1 pcs.*	525,00 £ *525.00 £*
	Laibungselement *Reveal element*	661 x 100 x 400 mm *661 x 100 x 400 mm*	4 01 048	1 Stk. *1 pcs.*	335,00 £ *335.00 £*

Systemaufbau *System setup*

ROHBAU-SET *SHELL SET* + INSTALLATIONS-SET *INSTALLATIONS-SET* + AUSSENHAUBE *OUTER HOOD* + INNENBLENDE *INTERIOR PANEL* = **AIRUNIT SOLUS 2.0**

Installations-Set | Installation-Set

	Artikel *Article*	Abmessung (LxBxH) *Dimensions (LxWxH)*	Art-Nr. *Item-no.*	VPE *PU*	Preis/Stk. *Price/Item*
	SOLUS 2.0 Installations-Set 500/1000 *SOLUS 2.0 Installation-Set 500/1000*	260 x ø 154 mm *260 x ø 154 mm*	4 01 071	1 Stk. *1 pc.*	399,00 £ *399.00 £*

Hauben | Hoods

Verschließbare Innenblende und integrierter Schalldämmung. Alle Hauben werden standardmäßig in RAL 9016 weiß geliefert, Sonderfarben sind auf Anfrage erhältlich.
Lockable interior panel and integrated sound insulation. All bonnets are supplied in RAL 9016 white as standard, special colours are available on request.

	Artikel *Article*	Abmessung (LxBxH) *Dimensions (LxWxH)*	Art-Nr. *Item-no.*	VPE *PU*	Preis/Stk. *Price/Item*
	Außenhaube RAL 9016 weiß – Sonderfarbe auf Anfrage *Outer hood RAL 9016 white – Custom colour on request*	224 x 223 x 45 mm *224 x 223 x 45 mm*	4 01 065	1 Stk. *1 pcs.*	112,50 £ *112.50 £*
	Außenhaube Edelstahl *Outer hood stainless steel*	224 x 223 x 45 mm *224 x 223 x 45 mm*	4 01 066	1 Stk. *1 pcs.*	185,00 £ *185.00 £*
	Innenblende DESIGN weiß (klappbar) *Interior panel DESIGN white (hinged)*	220 x 220 x 11 mm *220 x 220 x 11 mm*	4 01 057	1 Stk. *1 pcs.*	113,50 £ *113.50 £*
	Innenblende CUBE weiß (feststehend) *Interior panel CUBE white (fixed)*	220 x 220 x 45 mm *220 x 220 x 45 mm*	4 01 058	1 Stk. *1 pcs.*	105,00 £ *105.00 £*

TURN ist eine Innenblende mit Drehmechanismus und integrierter Schalldämmung. Sie ist in drei Formen erhältlich: eckig, rund und abgerundet. Standardmäßig wird die Haube in eckiger Form und RAL 9016 weiß geliefert. Sonderfarben sind auf Anfrage verfügbar.
TURN is an interior panel with a rotating mechanism and integrated sound insulation. It is available in three shapes: square, round and rounded. The bonnet is supplied in a square shape and RAL 9016 white as standard. Special colours are available on request.

	Artikel *Article*	Abmessung (LxBxH) *Dimensions (LxWxH)*	Art-Nr. *Item-no.*	VPE *PU*	Preis/Stk. *Price/Item*
	Innenblende TURN RAL 9016 weiß, eckig *Interior panel TURN RAL 9016 white, square*	240 x 240 x 15 mm *240 x 240 x 15 mm*	4 01 064	1 Stk. *1 pcs.*	55,00 £ *55.00 £*
	Innenblende TURN RAL 9016 weiß, rund *Interior panel TURN RAL 9016 white, round*	315 mm ø x 15 mm *315 mm ø x 15 mm*	4 01 062	1 Stk. *1 pcs.*	55,00 £ *55.00 £*
	Innenblende TURN RAL 9016 weiß, abgerundet *Interior panel TURN RAL 9016 white, rounded*	265 x 265 x 15 mm *265 x 265 x 15 mm*	4 01 063	1 Stk. *1 pcs.*	55,00 £ *55.00 £*

Zubehör | Accessories

	Artikel *Article*	Art-Nr. *Item-no.*	VPE *PU*	Preis/Stk. *Price/Item*
	AIRUNIT Filtereinsatz ISO Coarse 50% (G3), regenerierbar *AIRUNIT filter insert ISO Coarse 50% (G3), regenerable*	401 009	1 Stk. *1 pc.*	6,50 £ *6.50 £*
	AIRUNIT Pollenfilter (F7) ePM 2,5 60% / ePM 10 91,6% nach ISO 16890 *AIRUNIT Pollen filter (F7) ePM 2.5 60% / ePM 10 91.6% according to ISO 16890*	401 014	1 Stk. *1 pc.*	51,50 £ *51.50 £*

Systemaufbau *System setup*

ROHBAU-SET *SHELL SET* + INSTALLATIONS-SET *INSTALLATIONS-SET* + AUSSENHAUBE *OUTER HOOD* + INNENBLENDE *INTERIOR PANEL* = **AIRUNIT SOLUS 2.0**



AIRUNIT SOLUS 2.0 SE

Komplett-Set | Complete set

	Artikel *Article*	Art-Nr. *Item-no.*	VPE *PU*	Preis/Stk. *Price/Item*
	Komplettset AIRUNIT SOLUS 2.0 SE, 500 (Inkl. Rohbauset 500, Installationsset, Außenhaube weiß, Innenblende CUBE) *Complete set AIRUNIT SOLUS 2.0 SE, 500 (Incl. shell set 500, installation set, outer hood white, inner panel CUBE)*	4 01 026	1 Stk. *1 pcs.*	529,00 £ *529.00 £*
	Komplettset AIRUNIT SOLUS 2.0 SE, 500 Edelstahl (Inkl. Rohbauset 500, Installationsset, Außenhaube Edelstahl, Innenblende CUBE) *Complete set AIRUNIT SOLUS 2.0 SE, 500 stainless steel (Incl. shell set 500, installation set, outer hood stainless steel, inner panel CUBE)*	4 01 027	1 Stk. *1 pcs.*	596,00 £ *596.00 £*

Rohbau-Sets | Shell-sets

	Artikel *Article*	Abmessung (LxBxH) *Dimensions (LxWxH)*	Art-Nr. *Item-no.*	VPE *PU*	Preis/Stk. *Price/Item*
	Rohbau-Set 160 mm ungedämmt rund *Shell set 160 mm uninsulated round*	500 x ø 160 mm *500 x ø 160 mm*	4 01 049	1 Stk. *1 pcs.*	45,00 £ *45.00 £*
	Rohbau-Set 500 eckig *Shell set 500 square*	500 x 210 x 210 mm *500 x 210 x 210 mm*	4 01 050	1 Stk. *1 pcs.*	55,00 £ *55.00 £*
	Rohbau-Set 500 rund *Shell set 500 round*	497,5 x ø 198 mm *497.5 x ø 198 mm*	4 01 051	1 Stk. *1 pcs.*	55,00 £ *55.00 £*
	Rohbau-Set 1.000 rund *Shell set 1,000 round*	1.000 x ø 198 mm *1,000 x ø 198 mm*	4 01 052	1 Stk. *1 pcs.*	85,00 £ *85.00 £*
	Keller-Set *Basement set*	497,5 x ø 198 mm *497.5 x ø 198 mm*	4 01 030	1 Stk. *1 pcs.*	525,00 £ *525.00 £*
	Laibungselement *Reveal element*	661 x 100 x 400 mm *661 x 100 x 400 mm*	4 01 048	1 Stk. *1 pcs.*	335,00 £ *335.00 £*

Systemaufbau *System setup*

ROHBAU-SET *SHELL SET* + INSTALLATIONS-SET *INSTALLATIONS-SET* + AUSSENHAUBE *OUTER HOOD* + INNENBLENDE *INTERIOR PANEL* = **AIRUNIT SOLUS 2.0 SE**

Installations-Set | Installation-Set

	Artikel *Article*	Abmessung (LxBxH) *Dimensions (LxWxH)*	Art-Nr. *Item-no.*	VPE *PU*	Preis/Stk. *Price/Item*
	SOLUS 2.0 SE Installations-Set 500/1000 *SOLUS 2.0 SE Installation-Set 500/1000*	260 x ø 154 mm *260 x ø 154 mm*	4 01 072	1 Stk. *1 pc.*	279,00 £ *279.00 £*

Hauben | Hoods

Verschließbare Innenblende und integrierter Schalldämmung. Alle Hauben werden standardmäßig in RAL 9016 weiß geliefert, Sonderfarben sind auf Anfrage erhältlich.
Lockable inner panel and integrated sound insulation. All bonnets are supplied in RAL 9016 white as standard, special colours are available on request.

	Artikel *Article*	Abmessung (LxBxH) *Dimensions (LxWxH)*	Art-Nr. *Item-no.*	VPE *PU*	Preis/Stk. *Price/Item*
	Außenhaube RAL 9016 weiß – Sonderfarbe auf Anfrage *Outer hood RAL 9016 white – Custom colour on request*	224 x 223 x 45 mm *224 x 223 x 45 mm*	4 01 065	1 Stk. *1 pcs.*	112,50 £ *112.50 £*
	Außenhaube Edelstahl *Outer hood stainless steel*	224 x 223 x 45 mm *224 x 223 x 45 mm*	4 01 066	1 Stk. *1 pcs.*	185,00 £ *185.00 £*
	Innenblende DESIGN weiß (klappbar) *Interior panel DESIGN white (hinged)*	220 x 220 x 11 mm *220 x 220 x 11 mm*	4 01 057	1 Stk. *1 pcs.*	113,50 £ *113.50 £*
	Innenblende CUBE weiß (feststehend) *Interior panel CUBE white (fixed)*	220 x 220 x 45 mm *220 x 220 x 45 mm*	4 01 058	1 Stk. *1 pcs.*	105,00 £ *105.00 £*

TURN ist eine Innenblende mit Drehmechanismus und integrierter Schalldämmung. Sie ist in drei Formen erhältlich: eckig, rund und abgerundet. Standardmäßig wird die Haube in eckiger Form und RAL 9016 weiß geliefert. Sonderfarben sind auf Anfrage verfügbar.
TURN is an interior panel with a rotating mechanism and integrated sound insulation. It is available in three shapes: square, round and rounded. The bonnet is supplied in a square shape and RAL 9016 white as standard. Special colours are available on request.

	Artikel *Article*	Abmessung (LxBxH) *Dimensions (LxWxH)*	Art-Nr. *Item-no.*	VPE *PU*	Preis/Stk. *Price/Item*
	Innenblende TURN RAL 9016 weiß, eckig *Interior panel TURN RAL 9016 white, square*	240 x 240 x 15 mm *240 x 240 x 15 mm*	4 01 064	1 Stk. *1 pcs.*	55,00 £ *55.00 £*
	Innenblende TURN RAL 9016 weiß, rund *Interior panel TURN RAL 9016 white, round*	315mm ø x 15 mm *315 mm ø x 15 mm*	4 01 062	1 Stk. *1 pcs.*	55,00 £ *55.00 £*
	Innenblende TURN RAL 9016 weiß, abgerundet *Interior panel TURN RAL 9016 white, rounded*	265 x 265 x 15 mm *265 x 265 x 15 mm*	4 01 063	1 Stk. *1 pcs.*	55,00 £ *55.00 £*

Zubehör | Accessories

	Artikel *Article*	Art-Nr. *Item-no.*	VPE *PU*	Preis/Stk. *Price/Item*
	AIRUNIT Filtereinsatz ISO Coarse 50% (G3), regenerierbar *AIRUNIT filter insert ISO Coarse 50% (G3), regenerable*	401 009	1 Stk. *1 pc.*	6,50 £ *6.50 £*
	AIRUNIT Pollenfilter (F7) ePM 2,5 60% / ePM 10 91,6% nach ISO 16890 *AIRUNIT Pollen filter (F7) ePM 2.5 60% / ePM 10 91.6% according to ISO 16890*	401 014	1 Stk. *1 pc.*	51,50 £ *51.50 £*

Systemaufbau *System setup*

ROHBAU-SET *SHELL SET*	+	INSTALLATIONS-SET *INSTALLATIONS-SET*	+	AUSSENHAUBE *OUTER HOOD*	+	INNENBLENDE *INTERIOR PANEL*	=	**AIRUNIT SOLUS 2.0 SE**

» TECHNISCHE DETAILS SOLUS 2.0 / 2.0 SE
TECHNICAL DETAILS SOLUS 2.0 / 2.0 SE

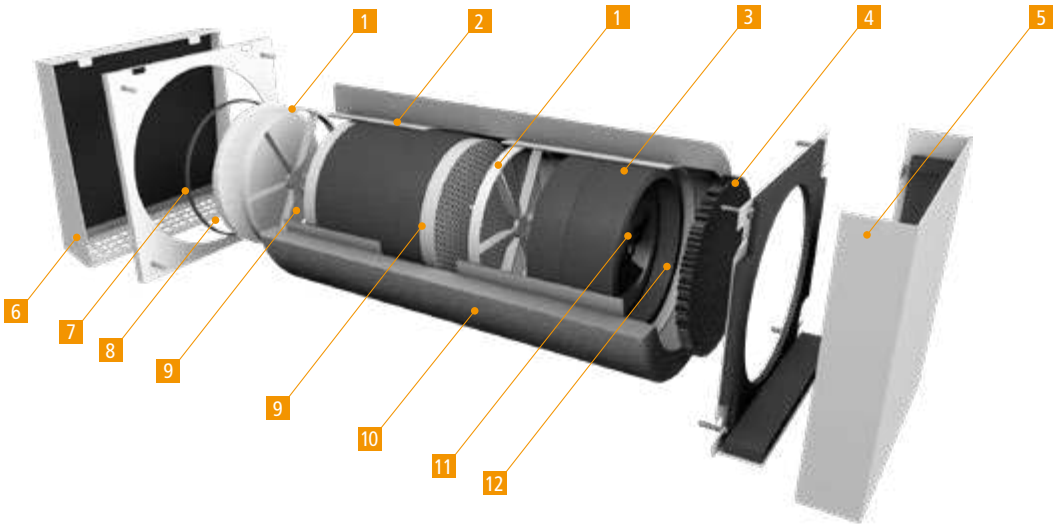

1	Strömungsrichter	1	*Flow straightener*
2	Gehäuserohr	2	*Housing tube*
3	Ventilatorhalter	3	*Fan holder*
4	Fingerschutz	4	*Finger protection*
5	Innenblende CUBE (andere Blenden optional)	5	*CUBE interior panel (other panels optional)*
6	Außenhaube (Wetterschutzhaube in RAL 9016 o. Edelstahl)	6	*External hood (weather protection hood in RAL 9016 or stainless steel)*
7	Luftfilterhalter	7	*Air filter holder*
8	Filter Coarse 55 % nach ISO 16890	8	*Filter Coarse 55 % according to ISO 16890*
9	Wärmespeicher mit Isolierung	9	*Heat accumulator with insulation*
10	Wanddurchführung rund (495 oder 1000 mm), (eckige Wandurchführung optional)	10	*Wall duct round (495 or 1000 mm), (square wall duct optional)*
11	Ventilator (12 V/DC)	11	*Fan (12 V/DC)*
12	Interne Sensorik (nicht in SOLUS 2.0 SE enthalten)	12	*Internal sensors (not included in SOLUS 2.0 SE)*

» EINBAUSITUATION AUSSENWAND
INSTALLATION SITUATION EXTERIOR WALL

1. Innenhaube CUBE *Interior hood CUBE*
2. Wanddurchführung rund Neopor 500mm *Wall duct round Neopor 500mm*
3. Außenwand *Exterior wall*
4. WDVS *ETICS*
5. AIRUNIT SOLUS 2.0 / 2.0 SE
6. Außenhaube *External hood*
7. Fenster *Window*

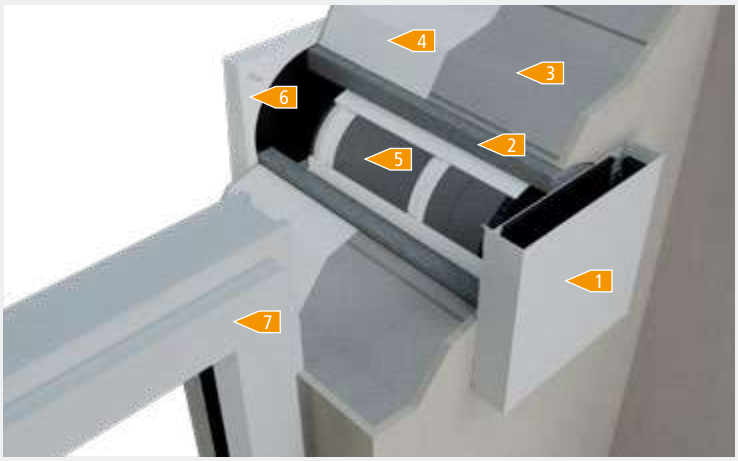

» AUSLEGUNGSBEISPIEL
DESIGN EXAMPLE

AIRUNIT SOLUS 2.0 / 2.0 SE für Zulufträume, Abluftventilator im Bad.
AIRUNIT SOLUS 2.0 / 2.0 SE for supply air rooms, extract air fan in the bathroom.

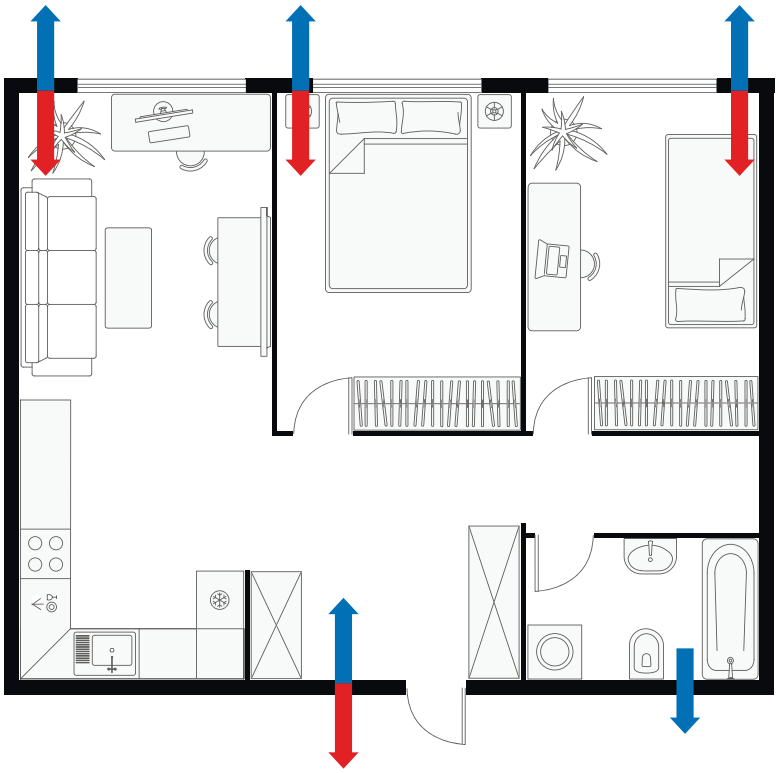

AIRUNIT SOLUS 2.0 / 2.0 SE
AIRUNIT SOLUS 2.0 / 2.0 SE

Abluftventilator
Exhaust air fan

» MONTAGEZEITEN
INSTALLATION TIMES

ARBEITSSCHRITT *WORKING STEP*	ZEIT *TIME*
Installation Rohbauset rund (inkl. Kernlochbohrung) *Installation round shell set (incl. core hole drilling)*	60 Minuten *60 Minutes*
Installation Rohbauset eckig *Installation of rectangular shell set*	10 Minuten *10 Minutes*
Anschluss der Regelung, verlegen der Stromleitungen *Connecting the control system, Laying the power lines*	25 Minuten *25 Minutes*
Befestigung der Wetterschutzhaube *Fastening the weather protection bonnet*	15 Minuten *15 Minutes*
Montage Installations-Set *Assembly Installation Set*	10 Minuten *10 Minutes*
Befestigung Innenhaube *Fastening interior hood*	15 Minuten *15 Minutes*

Die Montagezeiten variieren, je nach Bausituation und Gerätetyp. Die reine Montagezeit beträgt bei geübten Installateuren dabei in der Regel zwischen ca. 75 Minuten und 125 Minuten. Hierbei sind aber etwaige Aushärtezeiten der verwendeten Montagekleber zu beachten.
The installation times vary depending on the construction situation and the type of unit. The installation time for experienced installers is usually between approx. 75 minutes and 125 minutes. However, any curing times of the installation adhesives used must be taken into account.



INNENBLENDE TURN IN VERSCHIEDENEN DESIGNS

FLACHES DESIGN TRIFFT AUF INDIVIDUELLE OPTIK

TURN INTERIOR PANEL IN VARIOUS DESIGNS

FLAT DESIGN MEETS CUSTOMISED LOOK

Die Innenblenden für **SOLUS 2.0 / 2.0 SE** bieten optimalen Schutz und ansprechendes Design in drei wechselbaren Varianten: eckige Innenblende sowie runde und abgerundete Blenden auf Anfrage.

*The interior panels for **SOLUS 2.0 / 2.0 SE** offer optimum protection and an attractive design in three exchangeable versions: square interior panel as well as round and rounded front panels on request.*

TOP FEATURE

» VORTEILE *ADVANTAGES*

- ✓ Sehr flaches, ansprechendes Design
  Very flat, attractive design
- ✓ Einfache Installation und einfaches Austauschen
  Simple installation and easy replacement
- ✓ Verschiedene Farben zur Auswahl, Sonderfarben auf Anfrage
  Choice of various colours, special colours on request
- ✓ Drei Formen zur Auswahl
  Three shapes to choose from



» ANSICHT IM DETAIL *VIEW IN DETAIL*

Frontansicht (45° gedreht)
Front view (rotated 45°)



Rückansicht
Rear view



Seitenansicht
Side view



Innenblende TURN | Interior panel TURN

TURN ist eine Innenblende mit Drehmechanismus und integrierter Schalldämmung. Sie ist in drei Formen erhältlich: eckig, rund und abgerundet. Standardmäßig wird die Haube in RAL 9016 weiß geliefert. Sonderfarben sind auf Anfrage verfügbar.
TURN is an internal panel with a rotating mechanism and integrated sound insulation. It is available in three shapes: square, round and rounded. The bonnet is supplied in RAL 9016 white as standard. Special colours are available on request.

	Artikel *Article*	**Abmessung (LxBxH)** *Dimensions (LxWxH)*	**Art-Nr.** *Item-no.*	**VPE** *PU*	**Preis/Stk.** *Price/Item*
	Innenblende TURN RAL 9016 weiß, eckig *Interior panel TURN RAL 9016 white, square*	240 x 240 x 15 mm *240 x 240 x 15 mm*	4 01 064	1 Stk. *1 pcs.*	55,00 £ *55.00 £*
	Innenblende TURN RAL 9016 weiß, rund *Interior panel TURN RAL 9016 white, round*	315 mm ø x 15 mm *315 mm ø x 15 mm*	4 01 062	1 Stk. *1 pcs.*	55,00 £ *55.00 £*
	Innenblende TURN RAL 9016 weiß, abgerundet *Interior panel TURN RAL 9016 white, rounded*	265 x 265 x 15 mm *265 x 265 x 15 mm*	4 01 063	1 Stk. *1 pcs.*	55,00 £ *55.00 £*

» ERHÄLTLICHE FARBEN *AVAILABLE COLOURS*

RAL 9016 Weiß
RAL 9016 white

Edelstahl
Stainless steel



Anthrazit
Anthracite



Sonderfarben
Special colours

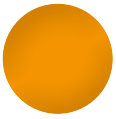

» WÄHLBARE FORMVARIANTEN *SELECTABLE SHAPE VARIANTS*

Typ: eckig
Type: square



Typ: rund
Type: round



Typ: abgerundet
Type: rounded



AIRUNIT GEMINI

air:unit Decentralised MVHR

GEMINI stellt eine innovative Lösung zur Einzelraumbelüftung mit balanciertem Volumenstrom und effektiver Wärmerückgewinnung dar. Das System besteht aus zwei unabhängig voneinander arbeitenden Einheiten, die sich z. B. ideal für den Einsatz in Küchen und Badezimmern eignen, aber auch in Wohn- oder Schlafzimmern für eine optimale Belüftung sorgen können.

GEMINI is an innovative solution for individual room ventilation with balanced volume flow and effective heat recovery. The system consists of two independently operating units that are ideal for use in kitchens and bathrooms, for example, but can also ensure optimum ventilation in living rooms or bedrooms.

1 Bis zu 98 % Wärmerückgewinnung
Up to 98 % heat recovery

2 Niedrige Schallwerte ab 5,7 dB(A)
Low sound values from 5.7 dB(A)

3 Vollautomatischer Betrieb (sensorgesteuertrt) durch integrierten Feuchtefühler
Fully automatic operation (sensor-controlled) through integrated humidity sensor










AIRUNIT GEMINI

- Wärmebereitstellungsgrad von bis zu 98 % bei 10 m³/h *Heat supply efficiency of up to 98 % at 10 m³/h*
- Bedarfsgeführter Automatikbetrieb durch integrierten Luftqualitätssensor *Demand-driven automatic operation through integrated air quality sensor*
- Kein paarweiser Betrieb notwendig – einfache und schnelle Planung *No paired operation necessary – Simple and fast planning*

12 V /DC	155 x 300 mm *155 x 300 mm*				ab 5,7 dB(A) *from 5.7 dB(A)*	

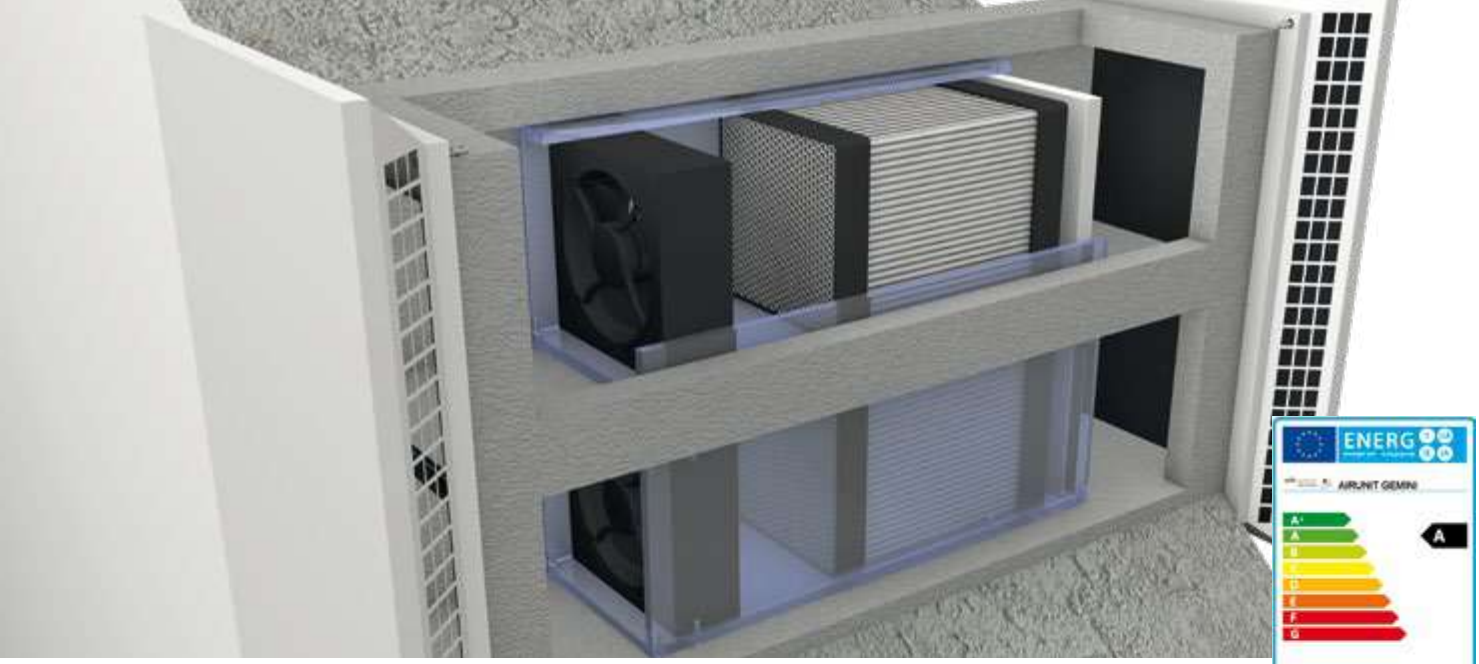

AIRUNIT GEMINI

Komplett-Set | Complete set



Artikel *Article*	Art-Nr. *Item-no.*	VPE *PU*	Preis/Stk. *Price/Item*
Komplettset AIRUNIT GEMINI (Inkl. Rohbauset 500, Installationsset, Außenhaube weiß, Innenblende weiß) *Complete set AIRUNIT GEMINI (Incl. shell set 500, installation set, outer hood white, interior panel white)*	4 02 051	1 Stk. *1 pcs.*	935,00 £ *935.00 £*

Rohbau-Sets | Shell-sets



Artikel *Article*	Abmessung (LxBxH) *Dimensions (LxWxH)*	Art-Nr. *Item-no.*	VPE *PU*	Preis/Stk. *Price/Item*
Rohbau-Set 500 eckig *Shell set 500 square*	500 x 155 x 298 mm *500 x 155 x 298 mm*	4 02 001	1 Stk. *1 pc.*	72,50 £ *72.50 £*
Rohbau-Set 1.000 eckig *Shell set 1,000 square*	1.000 x 155 x 298 mm *1,000 x 155 x 298 mm*	4 02 002	1 Stk. *1 pc.*	auf Anfrage *on request*
Rohbau-Set 500 rund *Shell set 500 round*	500 x 176 x 312 mm *500 x 176 x 312 mm*	4 02 003	1 Stk. *1 pc.*	72,50 £ *72.50 £*

Systemaufbau *System setup*

ROHBAU-SET *SHELL SET*	+	INSTALLATIONS-SET *INSTALLATIONS-SET*	+	AUSSENHAUBE *OUTER HOOD*	+	INNENBLENDE *INTERIOR PANEL*	=	**AIRUNIT GEMINI**

Installations-Set | Installation-Set



Artikel *Article*	Abmessung (LxBxH) *Dimensions (LxWxH)*	Art-Nr. *Item-no.*	VPE *PU*	Preis/Stk. *Price/Item*
Installations-Set 500/1000 *Installations-Set 500/1000*	155 x 300 mm *155 x 300 mm*	4 02 011	1 Stk. *1 pc.*	519,00 £ *519.00 £*

Hauben | Hoods

Verschließbare Innenblende und integrierte Schalldämmung. Alle Hauben werden standardmäßig in RAL 9016 weiß geliefert, Sonderfarben sind auf Anfrage erhältlich.
Lockable interior panel and integrated sound insulation. All bonnets are supplied in RAL 9016 white as standard, special colours are available on request.



Artikel *Article*	Abmessung (LxBxH) *Dimensions (LxWxH)*	Art-Nr. *Item-no.*	VPE *PU*	Preis/Stk. *Price/Item*
Innenblende weiß mit integrierter Geräteelektronik *Interior panel white with integrated electronics*	230 x 360 x 47 mm *230 x 360 x 47 mm*	4 02 021	1 Stk. *1 pc.*	265,00 £ *265.00 £*
Außenhaube RAL 9016 weiß Sonderfarbe auf Anfrage *Outer hood RAL 9016 white, Custom colour on request*	230 x 360 x 47 mm *230 x 360 x 47 mm*	4 02 026	1 Stk. *1 pc.*	125,00 £ *125.00 £*

Zubehör | Accessories



Artikel *Article*	Art-Nr. *Item-no.*	VPE *PU*	Preis/Stk. *Price/Item*
AIRUNIT Pollenfilter *AIRUNIT pollen filter*	402 031	1 Stk. *1 pc.*	27,90 £ *27.90 £*
AIRUNIT G3 Filter *AIRUNIT G3 filter*	402 032	1 Stk. *1 pc.*	5,50 £ *5.50 £*

Systemaufbau *System setup*

ROHBAU-SET *SHELL SET*	+	INSTALLATIONS-SET *INSTALLATIONS-SET*	+	AUSSENHAUBE *OUTER HOOD*	+	INNENBLENDE *INTERIOR PANEL*	=	**AIRUNIT GEMINI**

» TECHNISCHE DETAILS
TECHNICAL DETAILS

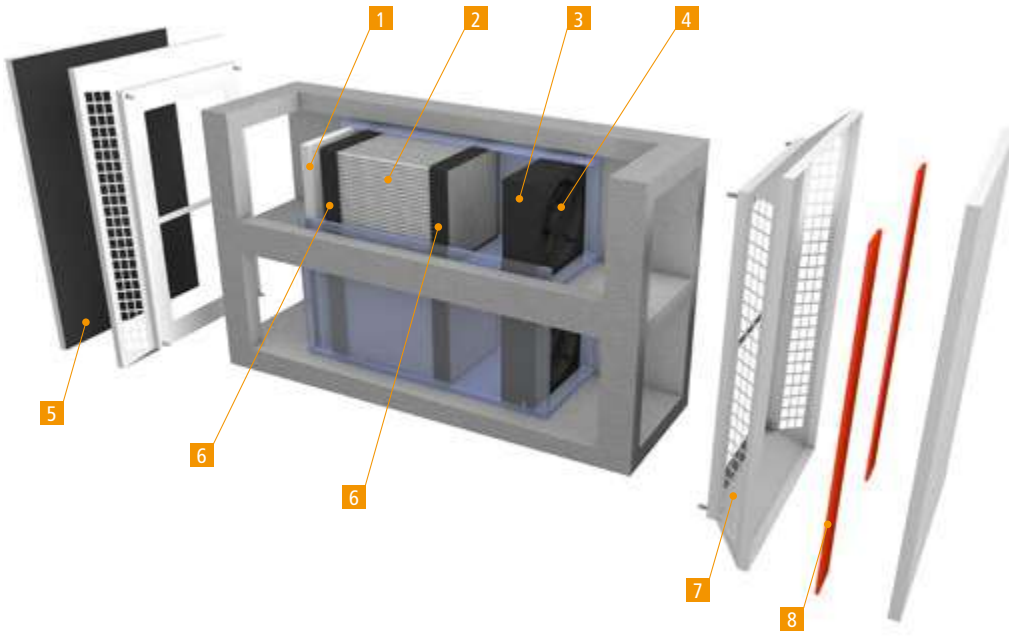

1	Filter ISO Coarse 50 % (G3)	1	*Filter ISO Coarse 50 % (G3)*
2	Keramikwärmespeicher für Wärmerückgewinnung	2	*Ceramic heat accumulator for heat recovery*
3	Ventilatorträger	3	*Ventilator support*
4	Ventilator (12 V/DC)	4	*Ventilator (12 V/DC)*
5	Außenhaube (Wetterschutzhaube in RAL 9016)	5	*Outer hood (weather protection hood)*
6	Abdichtung	6	*Sealing*
7	Raumseitiger Luftdurchlass	7	*Room side air diffuser*
8	Verschlussstreifen	8	*Locking strips*

» ÜBERSICHT DEZENTRALE WOHNRAUMLÜFTUNG
OVERVIEW DECENTRALISED HOME VENTILATION

Luftleistung *Air performance*	AUS | 5 | 10 | 21 | 30 m³/h im WRG Betrieb 40 m³/h im Abluftbetrieb *OFF | 5 | 10 | 21 | 30 m³/h* *in WRG mode 40 m³/h in extract air mode*
Wirkungsgrad Wärmetauscher *Heat exchanger efficiency*	bis 98 % *up to 98 %*
Schalldruckpegel (3 m) *Sound pressure level (3 m)*	5,7 | 16,9 | 31,4 | 37,6 | Abluft 31,4 dB(A) *5.7 | 16.9 | 31.4 | 37.6 | Exhaust air 31.4 dB(A)*
Filterklasse *Filter class*	G3, regenerierbar *G3, regenerable*

Maße Wanddurchführung (eckig) *Wall duct dimensions (angular)*	155 x 300 mm (B x H) Länge 500 mm (1000 mm) bis auf 300 mm kürzbar *155 x 300 mm (W x H)* *Length 500 mm (1000 mm)* *Can be shortened to 300 mm*
Funktion *Function*	Push & Pull
Regelung *Controller*	Regelung 2.0 *Controller 2.0*

» AUSLEGUNGSBEISPIEL
DESIGN EXAMPLE

AIRUNIT GEMINI für Zulufträume und im Bad.
AIRUNIT GEMINI for supply air rooms and in the bathroom.

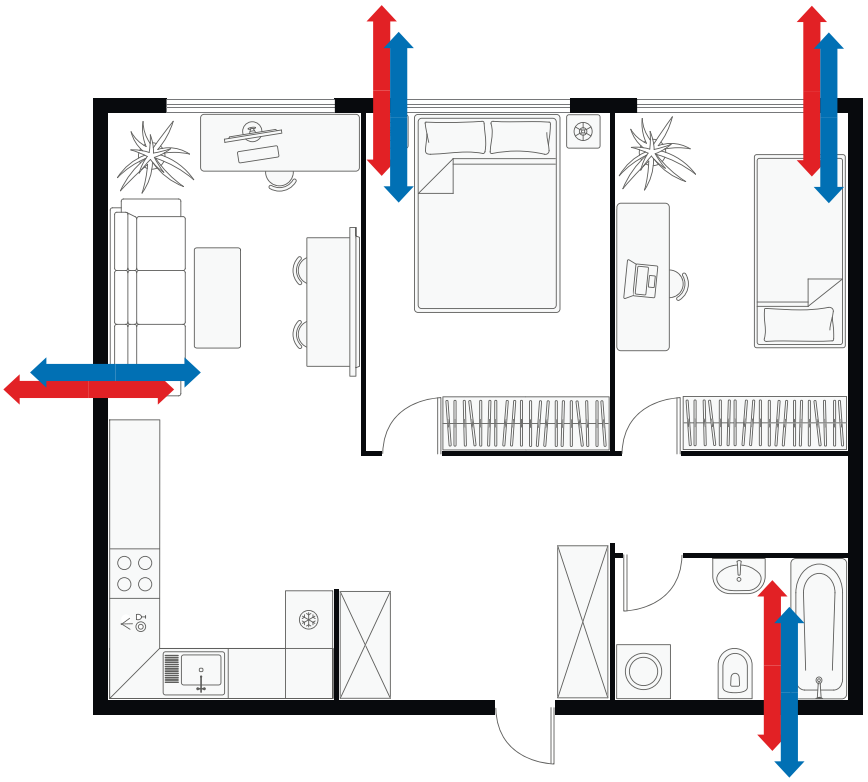

AIRUNIT GEMINI
AIRUNIT GEMINI

» MONTAGEZEITEN
INSTALLATION TIMES

ARBEITSSCHRITT *WORKING STEP*	ZEIT *TIME*
Installation Rohbauset rund (inkl. Kernlochbohrung) *Installation round shell set (incl. core hole drilling)*	60 Minuten *60 Minutes*
Installation Rohbauset eckig *Installation of rectangular shell set*	10 Minuten *10 Minutes*
Anschluss der Regelung, verlegen der Stromleitungen *Connecting the control system, Laying the power lines*	25 Minuten *25 Minutes*
Befestigung der Wetterschutzhaube *Fastening the weather protection bonnet*	15 Minuten *15 Minutes*
Montage Installations-Set *Assembly Installation Set*	10 Minuten *10 Minutes*
Befestigung Innenhaube *Fastening interior hood*	15 Minuten *15 Minutes*

Die Montagezeiten variieren, je nach Bausituation und Gerätetyp. Die reine Montagezeit beträgt bei geübten Installateuren dabei in der Regel zwischen ca. 75 Minuten und 125 Minuten. Hierbei sind aber etwaige Aushärtezeiten der verwendeten Montagekleber zu beachten.
The installation times vary depending on the construction situation and the type of unit. The installation time for experienced installers is usually between approx. 75 minutes and 125 minutes. However, any curing times of the installation adhesives used must be taken into account.

ÜBERSICHT AIRUNIT LÜFTUNGSGERÄTE
OVERVIEW AIRUNIT VENTILATION UNITS

	SOLUS		GEMINI
	SOLUS 2.0	SOLUS 2.0 SE	GEMINI
Wärmerückgewinnung maximal *Maximum heat recovery*	99 %	99 %	98 %
Schallemission ab (Schallleistungspegel) *Noise emission (sound power level)*	11 db(A)	11 db(A)	5,7 db(A)
Automatische Arbeitsweise interner Sensoren *Automatic operation of internal sensors*			
modulierend Innenraumfeuchte *Automatic operation of internal sensors*	●	●	●
modulierend Innen/Außentemperatur *Automatic operation of internal sensors*	●	●	●
modulierend Taupunktgesteuert "Kellerlüftung" *Automatic operation of internal sensors*	●	●	●
Minimale Wandstärke *Minimum wall thickness*	260 mm	260 mm	300 mm
Maximale Wandstärke *Maximum wall thickness*	1.000 mm	1.000 mm	1.000 mm
Benötigte Kernlochbohrung ab *Required core hole drilling from*	162 mm	162 mm	2 x 162 mm
Überschlägige Auslegung *Rough interpretation*	15 m²	15 m²	25 m²
Einzelraumgerät mit Abluftfunktion gemäß DIN 1946-6 *Single room unit with exhaust air function per DIN 1946-6*	●	●	●
Laibungsvariante *Reveal variant*	●	●	●
Kellervariante *Cellar variant*	●	●	●
Hauben *Hoods*	Metall/Edelstahl (indiv. RAL-Farbe möglich) *Metal/stainless steel (indiv. RAL color possible)*	Metall/Edelstahl (indiv. RAL-Farbe möglich) *Metal/stainless steel (indiv. RAL color possible)*	Metall/Edelstahl (indiv. RAL-Farbe möglich) *Metal/stainless steel (indiv. RAL color possible)*
			
Details *Details*	Seite *Page* 18	Seite *Page* 20	Seite *Page* 28

System AIRUNIT

CLEVER LÜFTEN MIT AIRUNIT

CLEVER VENTILATION WITH AIRUNIT













AIRUNIT Regelung *Control*

An die **AIRUNIT Regelung 2.0** können die **AIRUNIT SOLUS 2.0**, **AIRUNIT SOLUS 2.0** SE und **AIRUNIT GEMINI** Lüftungseinheiten in verschiedenen Kombinationen angeschlossen werden. Die Regelung ist zum Einbau in eine Hohlwanddose konzipiert und verfügt über einen Sleeptimer sowie eine optische Filteranzeige. Es kann ein Winterbetrieb mit Wärmerückgewinnung oder ein Sommerbetrieb ohne Wärmerückgewinnung eingestellt werden. Zudem besitzt die Regelung einen integrierten Betriebsstundenzähler. Mithilfe der Inbetriebnahme-Software kann jede Anlage an die individuellen Kundenwünsche angepasst werden.

***AIRUNIT SOLUS 2.0**, **AIRUNIT SOLUS 2.0** SE and **AIRUNIT GEMINI** ventilation units can be connected to the **AIRUNIT control unit 2.0** in various combinations. The control unit is designed for installation in a cavity wall box and has a sleep timer and an optical filter display. Winter operation with heat recovery or summer operation without heat recovery can be set. The control unit also has an integrated operating hours counter. The commissioning software can be used to adapt each system to individual customer requirements*

1 Software Unterstützung
Software support

2 Betriebsmodi: Wärmerückgewinnung / Querlüftung
Operating modes: heat recovery / cross ventilation

3 Sleeptimer Funktion
Sleeptimer function









EINE REGELUNG VIELE MÖGLICHKEITEN
ONE CONTROL MANY POSSIBILITIES

✓ An der **Regelung 2.0** können gleichzeitig die **AIRUNIT SOLUS 2.0, SOLUS** 2.0 SE und die **GEMINI** betrieben werden. *The **AIRUNIT SOLUS 2.0, SOLUS 2.0** SE and **GEMINI** can be operated simultaneously on the control unit 2.0.*

✓ Der abgestimmte Betrieb mit handelsüblichen Abluftventilatoren ist dank der internen Schnittstelle ohne zusätzliche Komponenten möglich. *Coordinated operation with commercially available exhaust air fans is possible without additional components thanks to the internal interface.*

✓ Einstellungen und Funktionen können softwaregestützt an Kundenwünsche angepasst werden. *Settings and functions can be customised with software support.*

» EINSATZBEREICH REGELUNG 2.0
APPLICATION CONTROL 2.0

	AIRUNIT SOLUS 2.0	AIRUNIT SOLUS 2.0 SE	AIRUNIT GEMINI
AIRUNIT Regelung 2.0 *AIRUNIT Control 2.0*	●	●	●



Regelung Control

Regelungen verdrahtet | Wired controller

Anschluss von bis zu 6 dezentralen Wohnraumlüftungsgeräten. 5 Stufen (4 Leistungsstufen + AUS). Querlüftung für den Sommerbetrieb, Filteranzeige, Digitaleingang (für Badlüfterbetrieb) sowie eine RS-485 Schnittstelle für den Anschluss externer Feuchte-, CO_2- und VOC-Sensoren. Zum Einbau in eine einfache Gerätedose inklusive weißem Rahmen.

Connection of up to 6 decentralised domestic ventilation units. 5 levels (4 power levels + OFF). Cross ventilation for summer operation, filter display, digital input (for bathroom fan operation) and an RS-485 interface for connecting external humidity, CO_2 and VOC sensors. For installation in a simple appliance box including white frame.



Artikel *Article*	**Art-Nr.** *Item-no.*	**VPE** *PU*	**Preis/Stk.** *Price/Item*
AIRUNIT Regelung 2.0 *AIRUNIT Control 2.0*	401 010	1 Stk. *1 pc.*	255,00 £ *255.00 £*
AIRUNIT Erweiterungs-Set Regelung 2.0 *AIRUNIT expansion set control 2.0*	401 015	1 Stk. *1 pc.*	65,00 £ *65.00 £*
AIRUNIT Luftqualitätssensor-Feuchte (nur für Regelung 2.0) *AIRUNIT Air quality sensor-humidity (only for Control 2.0)*	401011	1 Stk. *1 pc.*	189,00 £ *189.00 £*
AIRUNIT Luftqualitätssensor Co_2/Feucht Dezentrale Wohnraumlüftung *AIRUNIT Air quality sensor Co_2/humidity Decentralised living space ventilation*	401 016	1 Stk. *1 pc.*	355,00 £ *355.00 £*
AIRUNIT VOC Luftqualitätssensor Dezentrale Wohnraumlüftung *AIRUNIT VOC Air quality sensor Decentralised Living Space Ventilation*	401 017	1 Stk. *1 pc.*	235,00 £ *235.00 £*

» AUSLEGUNGSBEISPIEL REGELUNG
DESIGN EXAMPLE CONTROL

	AIRUNIT SOLUS 2.0 SE	AIRUNIT SOLUS 2.0	AIRUNIT GEMINI	Beispiel *Example**
Regelung 2.0 *Control 2.0*	6 Geräte *6 devices*	6 Geräte *6 devices*	4 Geräte *4 devices*	Beispiel: 4 x SOLUS 2.0 + 1 x GEMINI *Example: 4 x SOLUS 2.0 + 1 x GEMINI*
Regelung 2.0 1 x Erweiterungs-Set *Control 2.0* *1x extension set*	bis zu 12 Geräte *up to 12 devices*	bis zu 10 Geräte *up to 10 devices*	bis zu 8 Geräte *up to 8 devices*	Beispiel: 6 x SOLUS 2.0 + 4 x GEMINI *Example: 8 x SOLUS 2.0 + 4 x GEMINI*
Regelung 2.0 2 x Erweiterungs-Set *Control 2.0* *2x extension set*	bis zu 18 Geräte *up to 18 units*	bis zu 10 Geräte *up to 10 devices*	bis zu 8 Geräte *up to 8 devices*	Beispiel: 10 x SOLUS 2.0 SE + 4 x GEMINI *Example: 10 x SOLUS 2.0 SE+ 4 x GEMINI*

***Weitere Kombinationsmöglichkeiten, siehe hierzu Montageanleitung Regelung**
**Further combination options, see assembly instructions Control*



KELLERLÜFTUNG

EFFIZIENTE BELÜFTUNG UND HEIZENERGIEEINSPARUNG FÜR KELLERRÄUME

BASEMENT VENTILATION

EFFICIENT VENTILATION AND HEATING ENERGY SAVINGS FOR BASEMENTS

Mit dem **Keller-Set** kann die **AIRUNIT SOLUS 2.0** Räume unterhalb der Erdgleiche mit frischer Luft versorgen, während feuchte und verbrauchte Luft abgeführt wird. Dank der hocheffizienten Wärmerückgewinnung von bis zu 99 % sparen Sie wertvolle Heizenergie. Im Automatikbetrieb misst die integrierte Sensorik selbstständig und wählt den passenden Lüftungsmodus.

*With the **Basement set**, the **AIRUNIT SOLUS 2.0** can supply rooms below ground level with fresh air, while humid and stale air is extracted. Thanks to the highly efficient heat recovery of up to 99 %, you save valuable heating energy. In automatic mode, the integrated sensor system measures independently and selects the appropriate ventilation mode.*

» VORTEILE *ADVANTAGES*



- ✓ Zulassung für den Einsatz in Lüftungstechnischen Anlagen, Erfüllung der Anforderungen der VDI 6022, SWKI VA104-01, ÖNORM H 6021 und ÖNORM H 6038.
  Approval for use in ventilation systems, fulfilment of the requirements of VDI 6022, SWKI VA104-01, ÖNORM H 6021 and ÖNORM H 6038.
- ✓ Die Komponenten haben den Nachweis der Radondichtheit erbracht.
  The components have provided proof of radon tightness.
- ✓ Für Mindestwandstärken ab 190 mm geeignet.
  Suitable for minimum wall thicknesses from 190 mm.

» EINSATZBEREICHE *FIELDS OF APPLICATION*

Souterrain
Basement



Waschkeller
Basement laundry room



Neubau / Altbau
New building / old building



Mehrfamilienhäuser
Apartment blocks



Kellerlüftung/Taupunktsteuerung | Basement ventilation/dew point control

	Artikel *Article*	Abmessung (LxBxH) *Dimensions (LxWxH)*	Art-Nr. *Item-no.*	VPE *PU*	Preis/Stk. *Price/Item*
	Rohbau-Set 160 mm ungedämmt rund *Shell set 160 mm uninsulated round*	500 x ø 160 mm *500 x ø 160 mm*	4 01 049	1 Stk. *1 pcs.*	45,00 £ *45.00 £*
	Keller-Set *Basement set*	497,5 x ø 198 mm *497.5 x ø 198 mm*	4 01 030	1 Stk. *1 pcs.*	525,00 £ *525.00 £*
	SOLUS 2.0 Installations-Set 500/1000 *SOLUS 2.0 Installation-Set 500/1000*	260 x ø 154 mm *260 x ø 154 mm*	4 01 071	1 Stk. *1 pc.*	399,00 £ *399.00 £*
	Innenblende DESIGN weiß (klappbar) *Interior panel DESIGN white (hinged)*	220 x 220 x 11 mm *220 x 220 x 11 mm*	4 01 057	1 Stk. *1 pcs.*	113,50 £ *113.50 £*

Sensoren | Sensors

Das System kann optional mit den unten aufgeführten Sensoren erweitert werden.
The system can be optionally extended with the sensors listed below.

	Artikel *Article*	Art-Nr. *Item-no.*	VPE *PU*	Preis/Stk. *Price/Item*
	AIRUNIT Luftqualitätssensor-Feuchte (nur für Regelung 2.0) *AIRUNIT Air quality sensor-humidity (only for Control 2.0)*	401011	1 Stk. *1 pc.*	189,00 £ *189.00 £*
	AIRUNIT Luftqualitätssensor Co_2/Feucht Dezentrale Wohnraumlüftung *AIRUNIT Air quality sensor Co_2/humidity Decentralised living space ventilation*	401 016	1 Stk. *1 pc.*	355,00 £ *355.00 £*
	AIRUNIT VOC Luftqualitätssensor Dezentrale Wohnraumlüftung *AIRUNIT VOC Air quality sensor Decentralised Living Space Ventilation*	401 017	1 Stk. *1 pc.*	235,00 £ *235.00 £*

Systemaufbau *System setup*

ROHBAU-SET 160 MM *SHELL SET 160 MM* + KELLER-SET *BASEMENT-SET* + INSTALLATIONS-SET *INSTALLATIONS-SET* + INNENBLENDE *INTERIOR PANEL* = **AIRUNIT SOLUS 2.0 KELLERLÜFTUNG** ***BASEMENT VENTILATION***








0203 507 1659
hello@energycarbon.co.uk

Quotation form E-NERGY CARBON – MVHR

please mail to: **plans@energycarbon.co.uk**

Specialist company:

Project | Builder:

AIRUNIT components

I am interested in:

- ☐ SOLUS 2.0 decentralised ventilation unit with internal air quality sensors
- ☐ GEMINI decentralised single-room ventilation unit with internal air quality sensors
- ☐ SOLUS 2.0 SE decentralised ventilation unit
- ☐ AIRUNIT air quality sensor CO_2
- ☐ AIRUNIT air quality sensor VOC
- ☐ AIRUNIT Humidity sensor

- ☐ Combined system (AIRUNIT SOLUS / 2.0 SE in the living rooms, exhaust fan in the functional rooms*)
- ☐ Combined system (AIRUNIT GEMINI in the living rooms, exhaust fan in the functional rooms*)
- ☐ Heat recovery system (AIRUNIT SOLUS / 2.0 SE in the living rooms, AIRUNIT GEMINI in the functional rooms*)

*Functional rooms = bathroom, WC, utility room

Details of the construction

Building project	☐ New construction	☐ Renovation
Building impermeability	n50 _____1/h (without specification 0.8 1/h)	
Building location	☐ Normal	☐ Protected
Building height	☐ 0 to 15 m above ground surface	
	☐ > 15 m above ground surface	
Number of external facades	☐ 1 external facade	
	☐ > 1 external facade	
Heat insulation	☐ High (built after 1995 or completely renovated)	
	☐ Low (built before 1995 and not or only partially renovated)	
Fireplace	☐ None	
	☐ Room air independent with DIBt approval	
	☐ Room air dependent	
Clear room height	_____m (without specification 2.50 m)	
Number of persons	_____	

Essential information:

- Floor plan and use of space (m² number of rooms)
- For rooms with roof slopes side view and sectional view
- Should the basement be included?
- Outer wall thicker than 1000 mm

General Terms and Conditions

1. General information/scope of application
1.1 These General Terms and Conditions (GTC) apply exclusively and for all Contractors (Section 14 BGB (German Civil Code)), legal entities under public law or special funds under public law. We only accept opposing conditions or conditions of the Customer deviating from our general terms and conditions unless we have expressly agreed to their application in writing.
1.2 Our offers, services and deliveries are based exclusively upon these GTC.
1.3 With the receipt of an offer, an order confirmation or the granting of order or acceptance of a service with the incorporation of these general terms and conditions at the latest, the Contractor acknowledges that these GTC are to apply exclusively for the entire business relationship – also in the future.
1.4 Contractual stipulations agreed upon between the contractual parties in individual cases [also subsidiary agreements, amendments and changes] apply only in relation to an order and have to be documented in writing to be applicable, thereby taking priority over these GTC in any case.
1.5 Orders or assignments are binding for the Customer (I, 1); the agreement is formed by confirmation of the assignment or execution of the order or the assignment at our discretion. We explicitly reject deviating general terms and conditions or counter confirmations. An opposing assignation prohibition is hereby explicitly refuted. Our silence regarding such deviating conditions is particularly not regarded as recognition or approval, also in case of future transactions. Our offers are subject to change and non-binding unless we have explicitly declared them or indicated to be binding in writing.
1.6 The terms listed below are defined as follows:
"We / Contractor / Supplier": mfh systems GmbH, Hager Feld 8, 49191 Belm. "Force majeure": constitutes any reason which renders the fulfilment of the respective contractual obligations impossible and which is generated due to circumstances outside of the reasonable control of the respective Party, including but not limited to natural disasters, acts by governments or supra-national institutions, outbreaks of violence, national states of emergency, terror attacks, riots, internal unrests, fires, explosions or floods. "Order": constitutes any offer to the supplier for the sale of goods with reference to the conditions of this Agreement. "Principal / Customer": constitutes the Purchaser of the goods specified on the order form. "Goods": are the commodities dispatched by us. "Product description": is a detailed illustration of the goods with correct usage instructions.
2 Offer and conclusion of the contract
2.1 We are bound to an offer of the Customer for 14 days. Subsequent acceptances by the Principal represent a new offer and require the Contractor's acceptance. If the Principal's order deviates from the Contractor's quote, a contract is only formed in this case with the confirmation of the Contractor.
2.2 We reserve proprietary rights and copyrights to all documents e.g. calculations, drawings etc. provided to the Customer in the context of the assignment. The Purchaser may only transfer these to third parties with our written consent, regardless whether or not we have labelled them as confidential. If the Customer acts contrary to this regulation, we reserve the right to take further steps. These documents may not be made accessible to third parties unless we explicitly agree or if it is necessary for the implementation of the Agreement. Unless we accept the offer of the contractual partner within the period specified in item 2.1, these documents have to be returned to us without undue delay.
2.3 The Principal has to hand over the data or plans necessary for the execution of the service and which have to be provided by him in accordance with the Agreement free of charge and in due time, i.e. at least four (4) weeks prior to the commencement of production.
2.4 If this deadline is not met and if this omission causes delays, the Principal is responsible for any resulting additional costs and/or damages.
3 Quality of goods
3.1 Construction and form changes of the delivery item remain reserved if the delivery item is not significantly altered and if the changes are reasonable for the Purchaser or in the nature of things.
3.2 Templates, samples, analysis data and other specifications regarding the quality on our part are only indications within the actually available range of the respective values pertaining to dimensions, colour, quality, chemical composition and action mechanism of the products supplied by us. The Agreement is deemed fulfilled also in case of a respective excess or short delivery.
3.3 We only assume the guarantee for quality, durability or the earnings of the delivery item or the procurement risk upon explicit, written, order-related statement, however, not based on the content of product descriptions, technical data and other printed material and information.
4 Prices and payment conditions
4.1 Subject to a deviating agreement, prices apply ex our warehouse or ex works in case of direct dispatch from the manufacturers location, exclusive of packaging; (ex-works" (Incoterms 2010).
4.2 Specified and agreed prices are net plus VAT in the statutory amount applicable at the time of execution of the service. Payment is due immediately upon receipt or provision and receipt of the invoice without any deduction free paying agent, unless the invoice specifies a different payment term. A discount is only admissible following a special written agreement between us and the Purchaser. Payment is only received once we are ultimately able to dispose over the full amount. We do not accept bills of exchange or cheques as payment.
4.3 If the Purchaser is in default of payment, the entire claims against the Purchaser become due and payable immediately if he is in default with more than one account. Payments may only be made to employees of our company if these produce a written authorisation to collect.
4.4 If, based on facts which become known to us only after conclusion of the Agreement, there are justified doubts about the creditworthiness of the Purchaser or if the creditworthiness has deteriorated significantly between the conclusion of the Agreement and delivery, we may demand advance payment or corresponding securities. If the Purchaser does not pay in advance or provide securities despite a grace period and if the threat to refuse to pay after the deadline has expired, or if he finally refuses them, we can withdraw from the contract by written declaration.
4.5 The Purchaser is not permitted to offset our claims unless the claim for offsetting is uncontested, conclusively determined and accepted by us. The Purchaser is only entitled to a right of retention if his counter claim is based on the same contractual relationship.
5. Delivery and performance time, default / self-supply and force majeure
5.1 Delivery times and deadlines are determined by us in writing and are binding only at that point. The delivery deadline is met if the delivery item has been dispatched up to its expiration.
5.2 The delivery term commences on the day of undersigning a written purchase agreement or the dispatch of the order confirmation, however not before the delivery of the documents, permits or approvals to be provided by the Purchaser as well as the receipt of a possible/agreed deposit.
5.3 Partial deliveries are admissible if the contractual partner does not incur any significant additional expenses or additional costs, if the residual delivery is ensured and if the partial delivery is usable by the Customer in the context of the contractually determined purpose.
5.4 We shall inform the Customer in writing or text form immediately if we do not receive deliveries/performances from our pre-suppliers, not correctly or not in time for reasons outside of our sphere of responsibility for the provision of contractually owed deliveries/performances despite proper and sufficient respective provision [congruent provision] or in the event of force majeure for a significant period of time [i.e. with a duration of more than 14 calendar days]. In this case we are entitled to delay the delivery by the duration of the impediment or partially or entirely withdraw from the agreement with respect to the unfulfilled part if we have complied with our above mentioned duty to provide information and if we have not accepted the risk of procurement.
5.5 If a delivery/performance date or delivery/performance deadline has been bindingly agreed and if it is exceeded based on the above mentioned events, the Customer is entitled to withdraw from the agreement with respect to the unfulfilled part of the agreement following futile expiration of an appropriate period of grace if a further compliance with the agreement is objectively unacceptable for the Customer. Further claims of the Customer, particularly those pertaining to compensation, are excluded in this case. The regulation above applies accordingly if a conventional delivery/performance deadline has been exceeded by more than 7 calendar days due to the above mentioned reasons, also without the contractual agreement of a fixed delivery/performance deadline. If the agreement for delivery/performances to be provided by us is dissolved entirely or partially by us or the Customer due to the above mentioned regulations, we shall immediately refund to the Customer – deducting the cost incurred to us at that time – the part of consideration with respect to the dissolved part of the agreement in the event that he has paid a deposit.
6. Transfer of risk, dispatch, packaging
6.1 The route and means of dispatch are left to our discretion in the absence of an individual agreement. The goods shall be additionally insured at the request and expense of the Customer.
6.2 The Purchaser is responsible for any additional costs generated due to alterations to the routes and means based on Customer requests after the conclusion of the Agreement or special requests and interests of the Purchaser.
6.3 The risk for the goods is transferred to the Customer upon handover of the goods to the forwarding agent or freight carrier, however at the latest upon leaving the warehouse or, in case of direct dispatch ex-works upon the goods leaving the factory. This also applies in case of partial deliveries. If dispatch is delayed due to circumstances owed to the Purchaser, the risk is transferred to the Purchaser from the day the goods are ready for dispatch; however, we are obligated to store the goods at the request and expense of the Customer.
6.4 Detected transport damages have to be reported to us and the forwarder immediately and the goods have to be returned to us with an acknowledgement statement from the forwarding agent, post, rail or other parcel service as well as an assignation declaration of the Customer. Subsequently, we are able to dispatch a replacement delivery if the prerequisites of a claim of the transport company exists and if the Customer has submitted all necessary documents and information.
6.5 Delivered objects have to be accepted by the Purchaser also if they exhibit insignificant defects, regardless of his rights based on the law and the agreement.
6.6 Transport and all other packaging according to the specifications of the respectively valid Packaging Ordinance are non-returnable. The Purchaser is obligated to ensure the disposal of the packaging at his expense.
7. Warranty and notice of defect
7.1 We are entitled to subsequent fulfilment in form of a remedy or – in case of purchase agreements, to supply a new defect-free item at our discretion. We have the right to carry out supplementary fulfilment twice. Subsequently, the Customer can demand withdrawal or reduction according to the statutory regulations.
7.2 The Principal is obligated to inspect the delivery immediately. The supplier has to be informed in writing of the determination of defects within a preclusion period of one week, specifying the detailed reclamation. The preclusion period commences with the handover in case of obvious defects and upon discovery in case of hidden defects. Any warranty claims of the Customer are excluded upon the expiration of this period without a complaint of defects.
7.3 In case of purchase agreements, the statute of limitations for warranty claims based on purchasing or service supply agreements is one year from delivery of the goods, in case of service agreements one year from acceptance.
7.4 Warranty is excluded for the sale of used items.
7.5 This does not apply for claims based on warranty, the takeover of a procurement risk in terms of Section 276 BGB (German Civil Code), claims based on the violation of life, limb or health, malicious, intentional or gross negligent acts on our part. It also applies in cases of Sections 478, 479 BGB (recourse within the supply chain), Section 438 (1) no. 2 or in as far as a longer mandatory limitation period is determined. Section 305b BGB (priority of the individual verbal or textual or written understanding) remains unaffected. A reversal of the onus of proof is not associated with the above regulation.
7.6 Our warranty and the resulting liability is excluded if defects and related damages are not verifiably and culpably based on faulty material, faulty construction or execution or faulty manufacturing materials or, if owed, on insufficient usage instructions.
7.7 The warranty and resulting liability based on breach of duty due to poor performance is particularly excluded for the consequences of incorrect usage, unsuitable storage conditions and the consequences of chemical, electromagnetic, mechanical or electrolytic impacts, which do not comply with our product descriptions or an alternately agreed product specification or the respective product-specific data sheet on our part or the manufacturer's average standard impacts. This does not apply in case of malicious, gross negligent or intentional acts on our part or the violation of life, body or health, the assumption of a warranty, the quality risk according to Section 276 BGB (German Civil Code) or liability according to statutorily mandatory liability.
7.8 We are not liable according to Sections 478, 479 BGB (recourse in the supply chain – supplier regress), if the Customer has processed or incorporated or otherwise altered the products supplied by us according to the agreement, unless this complies with the contractually agreed purpose of the products.
7.9 The acknowledgement of breaches of duty in form of material defects owed to us always requires the written form. Section 305b BGB (priority of individual agreement) remains unaffected.
7.10 If the liability for damages is not based on the violation of life, limb or health of the Purchaser and negligence is not excluded, such claims become statute barred within one year, commencing with the generation of the claim.
7.11 The above mentioned exclusion of liability also applies for slightly negligent breaches of duty of our vicarious agents. If our liability for compensation is excluded or limited, this also applies in terms of the personal liability for compensation with respect to our employees, representatives and vicarious agents.
8. Reservation of title
8.1 We reserve ownership to the goods and objects delivered or – not permanently – installed by us up to the full payment of outstanding claims. The reservation of title also applies until all, including future and conditional claims from the business relationship between the Principal and us are fulfilled.
8.2 The Principal is entitled to process the supplied goods in the context of his regular business operation. The goods are processed for the Contractor without obligations for him. the new items become the property of the Contractor.
8.3 If the goods are processed with other goods not belonging to the Contractor, the Contractor obtains co-ownership of the newly produced time at the ratio of the invoice value of the reserved goods to the other processed items. If the property of the Contractor should nonetheless perish and the Principal should become (co-)owner, the Principal hereby transfers his ownership to the Contractor as security according to the ratio of the invoice value of the reserved goods to the other processed objects. In all cases mentioned above, the Principal has to store the items owned or co-owned by the Contractor free of charge for the Contractor.
8.4 The Principal's authority to on-sell expires automatically with a futile attempt of an enforcement of judgement of debt as well as the lodgement of an application to initiate insolvency proceedings pertaining to the Principal's assets. For the remainder, other injunctions pertaining to the reserved goods, particularly pledging and chattel mortgages without consent are inadmissible and lead to a prohibition to on-sell.
8.5 The Principal hereby assigns all claims with all ancillary rights generated from the on-selling of the reserved processed and unprocessed goods to the Contractor, who accepts this assignation.
8.6 In the event of a sale of processed, connected, mixed or intermingled reserved goods, the supplier procures the top-ranking partial amount equating to the percentage share of the invoice value of his supplied goods plus a security surcharge of 5%.
8.7 The Principal is entitled, subject to revocation at any time, to collect the claims assigned to the Contractor in the regular business operation. The Contractor shall not utilise his own authority to collect as long as the Purchaser complies with his payment obligations according to the Agreement – also toward third parties. If the Principal assigns his subsequent claim to a factoring institute in the context of so-called non-recourse factoring subject to assuming the delcredere risk, the Principal assigns his claims against the factoring institute for the payment of the factoring proceeds to the Contractor and is obligated to notify the factoring institute of this assignation immediately upon invoicing by the Contractor.
8.8 Upon demand, the Purchaser is obligated to provide the Contractor with a detailed list of the claims owed to the Contractor incl. name and address of the buyers, amount of individual claims, invoices etc. and all information necessary for the assertion of the assigned claims and allow the Contractor to verify this information. The Purchaser is obligated to handle the goods carefully.
8.9 The Purchaser is obligated to immediately inform us immediately in case of pledges or other third-party interventions. The Principal is only permitted any subsequent processing, installation, connection or redesigning (Sections 946, 947, 950 BGB) of the goods still owned by the Contractor with the prior written consent of the supplier.
9. Change to General Terms and Conditions
9.1 The Contractor is entitled to unilaterally change these General Terms and Conditions – in as far as they are incorporated in the contractual relationship with the contactor [Principal?] – as far as necessary for the elimination of subsequently arising equivalence disturbances or to adapt to changed legal or technical framework conditions. The contactor is informed of these amended regulations together with their relevant content.
9.2 The change becomes a component of the Agreement if the Principal does not object to the inclusion in the contractual relationship in writing within six (6) weeks following the receipt of the change notice.
10. Place of jurisdiction, applicable law
10.1 If the Purchaser is a merchant, a legal person under public law or a public special fund, the place of jurisdiction for all legal disputes is our registered address. This also applies for claims asserted during summary proceedings for recovery of debt.
10.2 The inclusion and interpretation of these General Terms and Conditions as well as conclusion and interpretation of legal transactions with the Principal are exclusively regulated according to the laws of the Federal Republic of Germany. The application of the uniform laws regarding the conclusion of international contacts pertaining to movable objects, the uniform law regarding the international purchase of movable objects of the of the United Nations Convention on Contracts for the International Sale of Goods are excluded.
11. Severability clause
11.1 If a condition of this Agreement is or becomes entirely or partially ineffective/null and void or unfeasible for reasons of the right of General Terms and Conditions according to Sections 305 to 310 BGB, the statutory regulations apply.
11.2 If a current or future regulation of the Agreement is or becomes entirely or partially ineffective/null and void or unfeasible due to reasons other than the regulations concerning the right to General Terms and Conditions according to Sections 305 to 310 BGB, the validity of the remaining conditions of this agreement is not affected in as far as the execution of the agreement – also under consideration of the subsequent regulations – would constitute an unreasonable hardship for one party. This also applies in the event of a gap after the conclusion of the Agreement, which requires completion.
11.3 Contrary to the principle of the adjudication of the German Federal Court of Justice, according to which a safeguarding conservation clause is Principally designed to merely reverse the burden of proof, the effectiveness of the remaining contractual regulations is to remain intact under any circumstances, thus excluding Section 139 BGB (German Civil Code) entirely.
11.4 The parties shall replace an invalid/void/unenforceable condition or gaps which require filling, which are invalid/void/unenforceable for reasons other than the regulations in terms of the right of general business conditions according to Sections 305 to 310 BGB, with an effective condition, the legal and commercial context of which complies with the invalid/void/unenforceable condition and the entire purpose of this Agreement. Section 139 BGB (partial invalidity) is explicitly excluded.
11.5 If the invalidity of a condition is based on a measure of performance or time (period of notice or deadline) specified therein, the condition is deemed agreed upon with a legally admissible measure closest to the original specification.

Energy Carbon Ltd
Kemp House,
152 - 160 City Road,
London EC1V 2NX

Tel+44203 507 1659

hello@energycarbon.co.uk



Status 04 | 2020 · Observe all manufacturer's specifications and installation instructions!