air:unit
www.airunit-ventilation.com

AIRUNIT Anschlussplan / connection diagram

AIRUNIT GEMINI + SOLUS 2.0

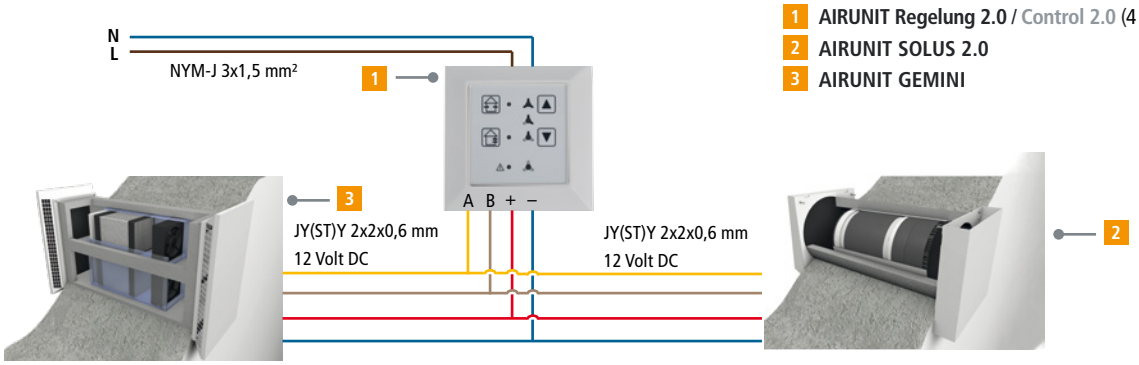

1 **AIRUNIT Regelung 2.0** / Control 2.0 (4 01 010)
2 **AIRUNIT SOLUS 2.0**
3 **AIRUNIT GEMINI**

AIRUNIT GEMINI

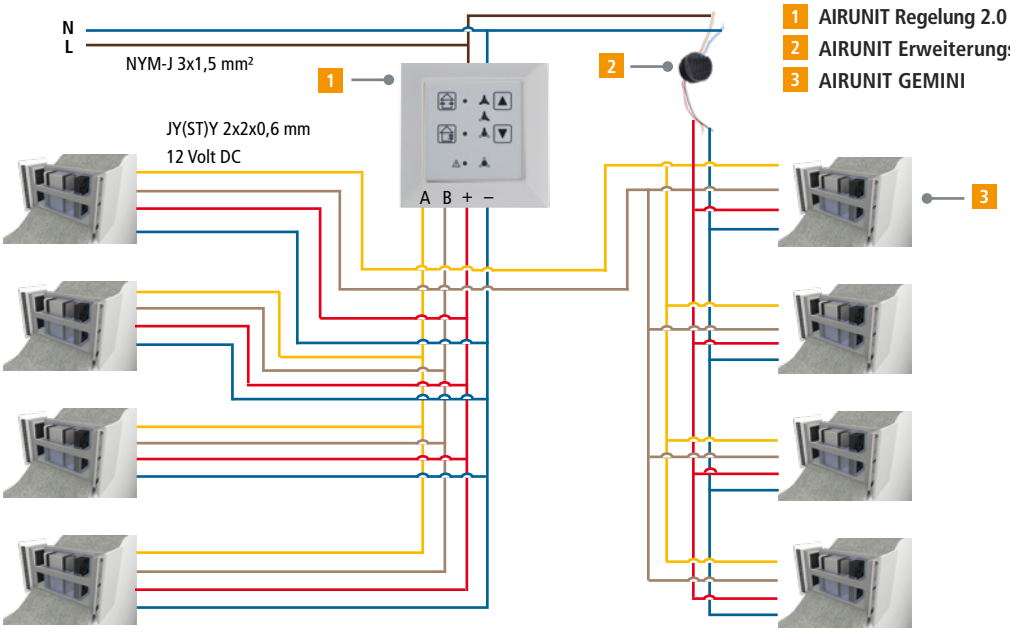

1 **AIRUNIT Regelung 2.0** / Control 2.0 (4 01 010)
2 **AIRUNIT Erweiterungs-Set** / Extension set (4 01 015)
3 **AIRUNIT GEMINI**

AIRUNIT SOLUS 2.0

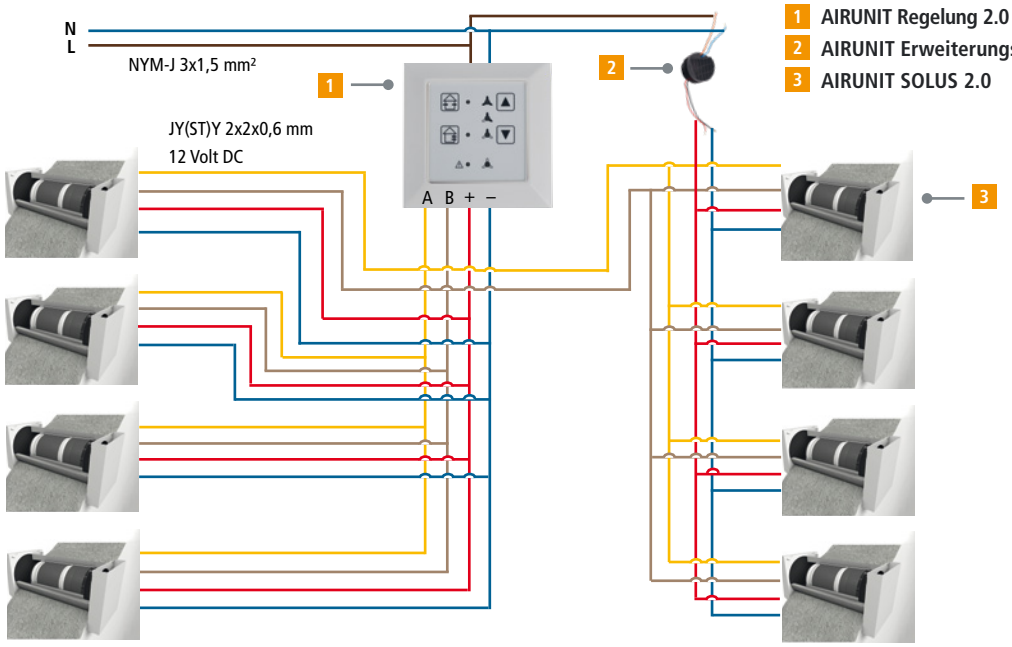

1 **AIRUNIT Regelung 2.0** / Control 2.0 (4 01 010)
2 **AIRUNIT Erweiterungs-Set** / Extension set (4 01 015)
3 **AIRUNIT SOLUS 2.0**

Stand / Status 03 | 2024 – Alle Herstellerangaben und Anleitungen beachten! / Observe all manufacturer's specifications and instructions! © mfh systems GmbH – www.mfh-systems.com

air:unit
www.airunit-ventilation.com

AIRUNIT Anschlussplan / connection diagram

AIRUNIT SOLUS 2.0 Übersichtsmatrix / overview matrix

	Keine / No GEMINI	1x GEMINI	2x GEMINI	3x GEMINI	4x GEMINI
Keine / No SOLUS 2.0		✓ (A)	✓ (A)	✓ (A)	✓ (A)
2x SOLUS 2.0	✓ (A)	✓ (A)	✓ (A)	✓ (B)	✓ (B)
4x SOLUS 2.0	✓ (A)	✓ (A)	✓ (B)	✓ (B)	✓ (B)
6x SOLUS 2.0	✓ (A)	✓ (B)	✓ (B)	✓ (B)	✓ (B)
8x SOLUS 2.0	✓ (B)	✓ (B)	✓ (B)	✓ (B)	X
10x SOLUS 2.0	✓ (B)	X	X	X	X
12x SOLUS 2.0	X	X	X	X	X
14x SOLUS 2.0	X	X	X	X	X
16x SOLUS 2.0	X	X	X	X	X
18x SOLUS 2.0	X	X	X	X	X

A Kein Erweiterungs-Set erforderlich / No extension set necessary
B 1 Erweiterungs-Set erforderlich / 1 extension set necessary

Stand / Status 03 | 2024 – Alle Herstellerangaben und Anleitungen beachten! / Observe all manufacturer's specifications and instructions! © mfh systems GmbH – www.mfh-systems.com